iDS-2CD7046G2/E-IHSYR
4MP DeepinView Varifocal Box Camera With Housing

Hikvision has been dedicated to develop products with security since established.
Hikvision always follows security by design principle and has adopted many methods of security technologies into our product development lifecycle, including terminal security, data security, application security, network security, and privacy protection.
In the meantime, the security technologies used by Hikvision are all in compliance with local applicable laws and safety regulations. These security measures could enhance product's cyber security protection capability and protect your devices as well as your data from malicious cyber attacks.

- High quality imaging with 4 MP resolution
- Excellent low-light performance via DarkFighter 2.0 technology
- Clear imaging against strong back light due to 150 dB SWDR technology
- Efficient H.265+ compression technology to save bandwidth and storage
- 5 streams to meet a wide variety of applications
- Water and dust resistant (IP66), vandal proof (IK10) and corrosion resistant (NEMA 4X)
- Capture vehicles and humans of different speed clearly via ShotN technology
- High frame rate, up to 2MP@120fps and 4MP@60fps
- Built-in G-sensor for vibration detection
- Built-in power meter for voltage exception alarm and historical power statistics

▪ Function

Face Capture

With embedded deep learning based algorithms, the camera is able to give the best shot of a target face through detecting, capturing, grading and selecting. The camera uses face exposure function to dynamically adjust face area exposure of captures and ensures high face picture quality.

Perimeter Protection

With embedded deep learning based target detection and classification algorithms, the camera carries out the duty of perimeter protection, monitoring the actions of line crossing, intrusion, region entrance, and region exiting. The algorithms greatly filter out the mistaken alarm caused by the interference of leafs, lights, animal, flag, etc.

Multi-Target-Type Detection

With the embedded deep learning algorithms, the camera detects and captures the face, human body, vehicle in the specified region.

Queue Management

With embedded deep learning based algorithms, the camera detects queuing-up people number and waiting time of each person. It can generate reports to compare the efficiency of different queuing-ups and display the changing status of one queue, and supports raw data export for further analysis.

Regional People Counting

With the embedded deep learning algorithms, the camera supports people density detection and will upload detection data through scheduled uploading, number of people change uploading and congestion level uploading. It also supports number of people exception detection and waiting time exception detection.

On/Off Duty Detection

With the embedded deep learning algorithms, the camera supports absence detection and on/off duty detection. It can detect the on/off duty status and people number changes in a predefined area.

Heat Map

The camera can generate a graphic description of visits (by calculating amount of people or amount of dwell time) in a configured area.

Multi-Dimension People Counting

With the embedded deep learning algorithms, the camera integrates multiple intelligences. It counts persons and compares them with the built-in face picture library to remove duplicates. It counts persons and reports an alarm simultaneously to achieve both the entrance control and people counting.

Hard Hat Detection

With the embedded deep learning algorithms, the camera detects the persons in the specified region. It detects whether the person is wearing a hard hat, and reports an alarm if not.

▪ Specification

Camera	
Image Sensor	1/1.8" Progressive Scan CMOS
Max. Resolution	2688 × 1520
Min. Illumination	Color: 0.0005 Lux @ (F1.2, AGC ON),B/W: 0.0001 Lux @ (F1.2, AGC ON),B/W: 0 Lux with IR
Shutter Time	1 s to 1/100,000 s
Day & Night	IR cut filter,Blue glass module (less ghost phenomenon)
Lens	
Focal Length & FOV	3.8 to 16 mm, horizontal FOV 109.1° to 29.6°, vertical FOV 61.3° to 16.8°, diagonal FOV 125.1° to 33.9° 11 to 40 mm, horizontal FOV 39.1° to 12.1°, vertical FOV 21.4° to 6.8°, diagonal FOV 45.8° to 13.9°
Lens Type	Varifocal lens, motorized lens, 11 to 40 mm and 3.8 to 16 mm optional
Lens Mount	CS mount
Focus	Manual
Iris Type	P-iris
Aperture	3.8 to 16 mm: F1.4 11 to 40 mm: constant F1.4 throughout the zoom range
DORI	
DORI	Wide: 3.8 to 16 mm: D (Detect): 52.4 m, O (Observe): 20.8 m, R (Recognize): 10.5 m, I (Identify): 5.2 m 11 to 40 mm: D (Detect): 151.7 m, O (Observe): 60.2 m, R (Recognize): 30.3 m, I (Identify): 15.2 m Tele: 3.8 to 16 mm: D (Detect): 220.7 m, O (Observe): 87.6 m, R (Recognize): 44.1m, I (Identify): 22.1m 11 to 40 mm: D (Detect): 551.7 m, O (Observe): 218.9 m, R (Recognize): 110.3m, I (Identify): 55.2 m
Illuminator	
Supplement Light Type	IR
Supplement Light Range	3.8 to 16 mm: 80 m 11 to 40 mm: 120 m
Smart Supplement Light	Yes
IR Wavelength	850 nm
Video	
Main Stream	Monitoring mode: 50 Hz: up to 50 fps (2688 × 1520, 1280 × 720), up to 100 fps (1920 × 1080) 60 Hz: up to 60 fps (2688 × 1520, 1280 × 720), up to 120 fps (1920 × 1080) *High frame rate is supported under monitoring mode only. smart mode: 50 Hz: 25 fps (2688 × 1520, 1920 × 1080, 1280 × 720) 60 Hz: 30 fps (2688 × 1520, 1920 × 1080, 1280 × 720)

Sub-Stream	50 Hz: 25 fps (704 × 576, 640 × 480) 60 Hz: 30 fps (704 × 480, 640 × 480)
Third Stream	50 Hz: 25 fps (1920 × 1080, 1280 × 720, 704 × 576, 640 × 480) 60 Hz: 30 fps (1920 × 1080, 1280 × 720, 704 × 480, 640 × 480)
Fourth Stream	50 Hz: 25 fps (704 × 576, 640 × 480) 60 Hz: 30 fps (704 × 480, 640 × 480)
Fifth Stream	50 Hz: 25 fps (704 × 576, 640 × 480) 60 Hz: 30 fps (704 × 480, 640 × 480)
Video Compression	Main stream: H.265+/H.265/H.264+/H.264, Sub-stream: H.265/H.264/MJPEG, Third stream: H.265/H.264, Fourth stream: H.265/H.264/MJPEG, Fifth stream: H.265/H.264/MJPEG
Video Bit Rate	32 Kbps to 8 Mbps
H.264 Type	Baseline Profile,Main Profile,High Profile
H.265 Type	Main Profile
Bit Rate Control	CBR,VBR
Scalable Video Coding (SVC)	H.264 and H.265 encoding
Region of Interest (ROI)	4 fixed regions for each stream
Target Cropping	Yes
e-PTZ	Support Patrol and Auto Tracking settings
Audio	
Audio Type	Mono sound
Audio Compression	G.711/G.722.1/G.726/MP2L2/PCM/MP3/AAC-LC
Audio Bit Rate	64 Kbps (G.711ulaw/G.711alaw)/16 Kbps (G.722.1)/16 Kbps (G.726)/32 to 192 Kbps (MP2L2)/8 to 320 Kbps (MP3)/16 to 64 Kbps (AAC-LC)
Audio Sampling Rate	8 kHz/16 kHz/32 kHz/48 kHz
Environment Noise Filtering	Yes
Network	
Protocols	TCP/IP, ICMP, HTTP, HTTPS, FTP, SFTP, SRTP, DHCP, DNS, DDNS, RTP, RTSP, RTCP, PPPoE, NTP, UPnP, SMTP, SNMP, IGMP, 802.1X, QoS, IPv4, IPv6, UDP, Bonjour, SSL/TLS, WebSocket, WebSockets
Simultaneous Live View	Up to 20 channels
API	ISAPI,SDK,ISUP,OTAP,ONVIF (Profile S, Profile G, Profile T, Profile M)
User/Host	Up to 32 users 3 user levels: administrator, operator, and user
Security	Password protection, complicated password, HTTPS encryption, 802.1X authentication (EAP-TLS, EAP-LEAP, EAP-MD5), watermark, IP address filter, basic and digest authentication for HTTP/HTTPS, WSSE and digest authentication for Open Network Video Interface, RTP/RTSP OVER HTTPS, Control Timeout Settings, Security Audit Log, TLS 1.2, TLS 1.3, TPM 2.0 (FIPS 140-2 level 2), AES128/256
Network Storage	NAS (NFS, SMB/CIFS),Auto Network Replenishment (ANR), Together with high-end Hikvision memory card, memory card encryption and health detection are supported.
Client	iVMS-4200,Hik-Connect,Hik-Central

Web Browser	Plug-in required live view: IE 10, IE 11, Plug-in free live view: Chrome 57.0+, Firefox 52.0+, Edge 89+, Safari 11+, Local service: Chrome 57.0+, Firefox 52.0+, Edge 89+
Image	
Image Parameters Switch	Yes
Image Settings	Rotate mode,saturation,brightness,contrast,sharpness,AGC,white balance,adjustable by client software or web browser
Day/Night Switch	Day,Night,Auto,Schedule,Alarm Trigger
Wide Dynamic Range (WDR)	150 dB
SNR	≥ 52 dB
Image Enhancement	BLC,HLC,3D DNR,Distortion Correction,Defog
Privacy Mask	8 programmable polygon privacy masks
Picture Overlay	LOGO picture can be overlaid on video with 128 × 128 24 bit bmp format.
Image Stabilization	EIS
Interface	
Video Output	1 Vp-p Composite Output (75 Ω/CVBS) (Only for debugging)
Ethernet Interface	1 RJ45 100 M/1000 M self-adaptive Ethernet port
On-Board Storage	Built-in memory card slot, support microSD/microSDHC/microSDXC card, up to 1 TB
Audio	Without -R: 1 input (line in), 1 output (line out), 3.5 mm connector
Alarm	2 inputs, 2 outputs (max. 24 VDC, 1 A)
RS-485	1 RS-485 (Half duplex, HIKVISION, Pelco-P, Pelco-D, self-adaptive)
Reset Key	Yes
Power Output	12 VDC, max. 100 mA
Event	
Basic Event	Motion detection (support alarm triggering by specified target types (human and vehicle)),video tampering alarm,exception (network disconnected, IP address conflict, illegal login, abnormal restart, HDD full, HDD error)
Smart Event	scene change detection,audio exception detection,defocus detection
Linkage	Upload to FTP/NAS/memory card,notify surveillance center,send email,trigger alarm output,trigger recording,trigger capture,audible warning
Deep Learning Function	
Multi-target-type Detection	Supports simultaneous detection and capture of human body, face, and vehicle, Gets 7 face features, Gets 13 human body features, Gets 2 vehicle features, Supports counting the number of line crossing targets by type, including human body, non-motor vehicle, motor vehicle, Supports dynamic mosaic mask
Face Capture	Detects up to 120 faces simultaneously, captures up to 40 face pictures per frame simultaneously and uploads up to 10 face pictures per second, Supports swing left and right from -60° to 60°, tilt up and down from -30° to 30°, Uploads face with background and closed-up face pictures, Supports best shot and quick shot for capture mode, Supports dynamic mosaic mask, Gets 7 face features

Face Comparison	Up to 10 face libraries. 30,000 faces for each library. 150,000 faces in total, Supports face library encryption
Perimeter Protection	Line crossing, intrusion, region entrance, region exiting Support alarm triggering by specified target types (human and vehicle) Support combined event alarm triggering
People Counting	Supports Multi-Dimension People Counting, Supports counting, displaying and exporting the people flow data of entering, exiting and passing by (The data is stored in the flash.), Supports real-time uploading and uploading by statistic cycle, Supports generating daily, weekly, monthly or annually reports, Supports dynamic deduplication based on face picture comparison, and can filter out the target with the same custom face pictures, same attributes, or filter out repeated invalid targets within the set time interval, Supports face feature deduplication, Supports people flow data replenishment
Queue Management	Supports up to 8 detection regions, and independent arming schedule and linkage method Supports 2 detection modes: regional people queuing-up, waiting time detection Generates reports to compare the efficiency of different queuing-ups and display the changing status of one queue Supports raw data export for further analysis Supports real-time data uploading and scheduled data uploading Regional people queuing-up: supports 4 alarm trigger conditions, including greater than threshold, less than threshold, equal to threshold, not equal to threshold Waiting time detection: supports 1 alarm trigger condition, including greater than threshold
Heat Map	A graphic description of visits (by calculating amount of people or amount of dwell time) in a configured area., Two report types are available, space heat map and time heat map line chart.
Hard Hat Detection	Detects up to 30 human targets simultaneously Supports up to 4 shield regions
Metadata	Intrusion detection,region entrance detection,line crossing detection,region exiting detection,face capture,multi-target-type detection

Regional People Counting	Supports up to 8 detection regions, and independent arming schedule and linkage method Supports 3 detection modes: people density detection, number of people exception detection, waiting time exception detection Supports parameter settings: alarm times per exception, alarm interval, first alarm delay Supports searching real-time number of people People density detection: supports scheduled uploading, number of people change uploading, congestion level uploading Number of people exception detection: supports 6 alarm trigger conditions, including greater than threshold A, less than threshold A, equal to threshold A, not equal to threshold A, greater than threshold A and less than threshold B, less than threshold A or greater than threshold B (threshold A should be less than threshold B) Waiting time exception detection: supports 3 alarm trigger conditions, including greater than threshold A, less than threshold A, greater than threshold A and less than threshold B (threshold A should be less than threshold B)
On/Off Duty Detection	Supports up to 8 detection regions, and independent arming schedule and linkage method Supports 2 detection modes: absence detection, on/off duty detection Supports parameter settings: person on duty, absence duration
General	
Power	24 VDC ± 20%, 1.06 A, max. 25.4 W, three-core terminal block 24 VAC ± 20%, 1.68 A, max. 26.3 W, three-core terminal block PoE: IEEE 802.3bt, Type3, Class 5, 42.5 V to 57 V, 0.7 A to 0.52 A, max. 29.4 W
Material	Aluminum alloy body, PP sun shield, PC front panel
Dimension	465.3 mm × 169.2 mm × 164.7 mm (18.3" × 6.7" × 6.5")
Package Dimension	615 mm × 360 mm × 225 mm (24.2" × 14.2" × 8.9")
Weight	Approx. 4485 g (9.89 lb.)
With Package Weight	Approx. 6875 g (15.2 lb.)
Storage Conditions	-40 °C to 65 °C (-40 °F to 149 °F). Humidity 95% or less (non-condensing)
Startup and Operating Conditions	-40 °C to 65 °C (-40 °F to 149 °F). Humidity 95% or less (non-condensing)
Language	33 languages: English, Russian, Estonian, Bulgarian, Hungarian, Greek, German, Italian, Czech, Slovak, French, Polish, Dutch, Portuguese, Spanish, Romanian, Danish, Swedish, Norwegian, Finnish, Croatian, Slovenian, Serbian, Turkish, Korean, Traditional Chinese, Thai, Vietnamese, Japanese, Latvian, Lithuanian, Portuguese (Brazil), Ukrainian
General Function	Heartbeat,one-key reset,mirror,password protection,pixel counter
Heater	Yes
Device Management	Supports adding alarm box (DS-FM2466) in the LAN to expand 6 additional input and 6 output alarm interfaces
Approval	
EMC	CE-EMC: EN 55032:2015+A1:2020, EN 50130-4:2011+A1:2014, EN IEC 61000-3-2:2019+A1:2021, EN 61000-3-3:2013+A1:2019+A2:2021, RCM: AS/NZS CISPR 32: 2015, IC: ICES-003: Issue 7, KC: KN32: 2015, KN35: 2015

Safety	CB: IEC 62368-1: 2014+A11, CE-LVD: EN 62368-1: 2014/A11: 2017, BIS: IS 13252 (Part 1): 2010/IEC 60950-1: 2005, LOA: IEC/EN 60950-1
Environment	CE-RoHS: 2011/65/EU, WEEE: 2012/19/EU, Reach: Regulation (EC) No 1907/2006
Protection	IP66: IEC 60529-2013,IK10: IEC 62262:2002
Anti-Corrosion Protection	With -Y: NEMA 4X(NEMA 250-2018)
Automotive and Railway	With -R: EN50121-4
Other	PVC FREE

▪ Typical Application

Hikvision products are classified into three levels according to their anti-corrosion performance. Refer to the following description to choose for your using environment.

With -Y model: This model has MODERATE PROTECTION.
Without -Y model: This model has NO SPECIFIC PROTECTION.

Level	Description
Top-level protection	Hikvision products at this level are equipped for use in areas where professional anti-corrosion protection is a must. Typical application scenarios include coastlines, docks, chemical plants, and more.
Moderate protection	Hikvision products at this level are equipped for use in areas with moderate anti-corrosion demands. Typical application scenarios include coastal areas about 2 kilometers (1.24 miles) away from coastlines, as well as areas affected by acid rain.
No specific protection	Hikvision products at this level are equipped for use in areas where no specific anti-corrosion protection is needed.

▪ Available Model

iDS-2CD7046G2/E-IHSYR(11-40mm)

iDS-2CD7046G2/E-IHSYR(3.8-16mm)

▪Dimension

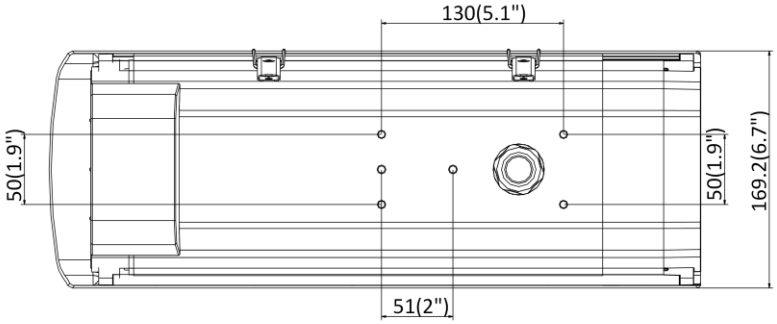

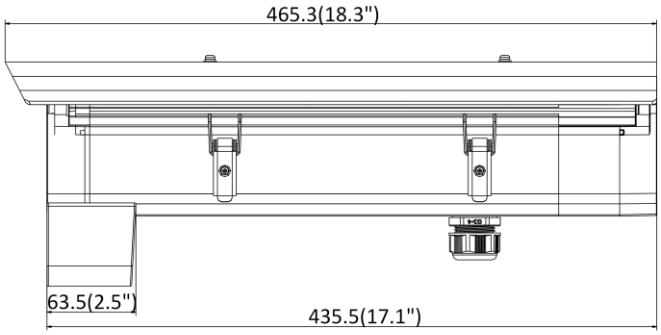

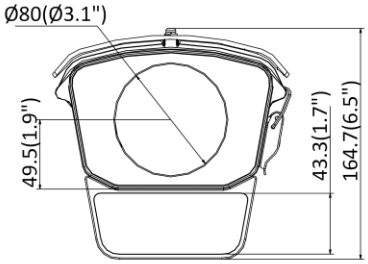

Unit: mm(inch)

▪ Accessory

▪Optional

DS-1269ZJ Pendant Mount	DS-1233ZJ Pendant Mount	DS-1214ZJ-L-Y2 Horizontal pole mount	DS-1214ZJ-T-Y Horizontal pole mount
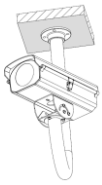	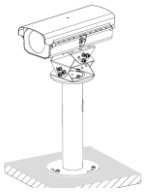	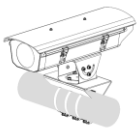	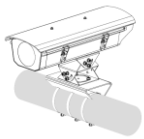

Headquarters
No.555 Qianmo Road, Binjiang District,
Hangzhou 310051, China
T +86-571-8807-5998
www.hikvision.com

Follow us on social media to get the latest product and solution information.

Hikvision HikvisionHQ HikvisionHQ Hikvision_Global Hikvision Corporate Channel hikvisionhq

© Hangzhou Hikvision Digital Technology Co., Ltd. Unless otherwise agreed, Hikvision makes no warranties, express or implied. We reserve the right to introduce modifications without notice.