iDS-2CD7086G2/EP-IHSYR
8MP DeepinView ANPR Box Camera With Housing

Hikvision has been dedicated to develop products with security since established.
Hikvision always follows security by design principle and has adopted many methods of security technologies into our product development lifecycle, including terminal security, data security, application security, network security, and privacy protection.
In the meantime, the security technologies used by Hikvision are all in compliance with local applicable laws and safety regulations. These security measures could enhance product's cyber security protection capability and protect your devices as well as your data from malicious cyber attacks.

- High quality imaging with 8 MP resolution
- Excellent low-light performance via DarkFighter 2.0 technology
- Clear imaging against strong back light due to 140 dB AWDR technology
- Efficient H.265+ compression technology to save bandwidth and storage
- 5 streams to meet a wide variety of applications
- Water and dust resistant (IP66), vandal proof (IK10) and corrosion resistant (NEMA 4X)
- High frame rate, up to 8MP@60fps and 2MP@120fps
- Built-in G-sensor for vibration detection
- Built-in power meter for historical power statistics
- License plate recognition and vehicle attribution recognition

▪ Function

Perimeter Protection

With embedded deep learning based target detection and classification algorithms, the camera carries out the duty of perimeter protection, monitoring the actions of line crossing, intrusion, region entrance, and region exiting. The algorithms greatly filter out the mistaken alarm caused by the interference of leafs, lights, animal, flag, etc.

Road Traffic and Vehicle Detection

With embedded deep learning based license plate capture and recognition algorithms, the camera alone can achieve plate capture and recognition. The algorithm enjoys the high recognition accuracy of common plates and complex-structured plates, which is a great step forward comparing to traditional algorithms. Blocklist and allowlist are available for plate categorization and separate alarm triggering.

▪ Specification

Camera	
Image Sensor	1/1.8" Progressive Scan CMOS
Max. Resolution	3840 × 2160
Min. Illumination	Color: 0.0007 Lux @ (F1.4, AGC ON),B/W: 0.0001 Lux @ (F1.4, AGC ON),B/W: 0 Lux with IR
Shutter Time	1 s to 1/100,000 s
Day & Night	IR cut filter,Blue glass module (less ghost phenomenon)
Lens	
Focal Length & FOV	3.8 to 16 mm, horizontal FOV 107.4° to 29.1°, vertical FOV 60° to 16.5°, diagonal FOV 123.1° to 33.4° 11 to 40 mm, horizontal FOV 38.4° to 11.9°, vertical FOV 20.9° to 6.7°, diagonal FOV 44.9° to 13.7°
Lens Type	Varifocal lens, motorized lens, 11 to 40 mm and 3.8 to 16 mm optional
Lens Mount	CS mount
Focus	Manual
Iris Type	P-iris
Aperture	3.8 to 16 mm: F1.4 11 to 40 mm: constant F1.4 throughout the zoom range
DORI	
DORI	Wide: 3.8 to 16 mm: D (Detect): 76.0 m, O (Observe): 30.2 m, R (Recognize): 15.2 m, I (Identify): 7.6 m 11 to 40 mm: D (Detect): 220.0 m, O (Observe): 87.3 m, R (Recognize): 44.0 m, I (Identify): 22.0 m Tele: 3.8 to 16 mm: D (Detect): 320.0 m, O (Observe): 127.0 m, R (Recognize): 64.0m, I (Identify): 32.0m 11 to 40 mm: D (Detect): 800.0 m, O (Observe): 317.5 m, R (Recognize): 160.0m, I (Identify): 80.0 m The DORI values are calculated using pixel densities for different use cases as recommended by the EN 62676-4 standard.
Illuminator	
Supplement Light Type	IR
Supplement Light Range	3.8 to 16 mm: 80 m 11 to 40 mm: 120 m
Smart Supplement Light	Yes
IR Wavelength	850 nm

Video	
Main Stream	Monitoring mode: 50 Hz: up to 50 fps (3840 × 2160, 3072 × 1728, 2688 × 1520, 1280 × 720), up to 100 fps (1920 × 1080) 60 Hz: up to 60 fps (3840 × 2160, 3072 × 1728, 2688 × 1520, 1280 × 720), up to 120 fps (1920 × 1080) *High frame rate is supported under monitoring mode only. smart mode: 50 Hz: 25 fps (3840 × 2160, 3072 × 1728, 2688 × 1520, 1920 × 1080, 1280 × 720) 60 Hz: 30 fps (3840 × 2160, 3072 × 1728, 2688 × 1520, 1920 × 1080, 1280 × 720)
Sub-Stream	50 Hz: 25 fps (1280 × 720,704 × 576, 640 × 480) 60 Hz: 30 fps (1280 × 720,704 × 480, 640 × 480)
Third Stream	50 Hz: 25 fps (1920 × 1080, 1280 × 720, 704 × 576, 640 × 480) 60 Hz: 30 fps (1920 × 1080, 1280 × 720, 704 × 480, 640 × 480)
Fourth Stream	50 Hz: 25 fps (704 × 576, 640 × 480) 60 Hz: 30 fps (704 × 480, 640 × 480)
Fifth Stream	50 Hz: 25 fps (704 × 576, 640 × 480) 60 Hz: 30 fps (704 × 480, 640 × 480)
Video Compression	Main stream: H.265+/H.265/H.264+/H.264, Sub-stream: H.265/H.264/MJPEG, Third stream: H.265/H.264, Fourth stream: H.265/H.264/MJPEG, Fifth stream: H.265/H.264/MJPEG
Video Bit Rate	32 Kbps to 16 Mbps
H.264 Type	Baseline Profile,Main Profile,High Profile
H.265 Type	Main Profile
Bit Rate Control	CBR,VBR
Scalable Video Coding (SVC)	H.264 and H.265 encoding
Region of Interest (ROI)	4 fixed regions for each stream
Target Cropping	Yes
e-PTZ	Support Patrol and Auto Tracking settings
Audio	
Audio Type	Mono sound
Audio Compression	G.711/G.722.1/G.726/MP2L2/PCM/MP3/AAC-LC
Audio Bit Rate	64 Kbps (G.711ulaw/G.711alaw)/16 Kbps (G.722.1)/16 Kbps (G.726)/32 to 192 Kbps (MP2L2)/8 to 320 Kbps (MP3)/16 to 64 Kbps (AAC-LC)
Audio Sampling Rate	8 kHz/16 kHz/32 kHz/48 kHz
Environment Noise Filtering	Yes
Network	
Protocols	TCP/IP, ICMP, HTTP, HTTPS, FTP, SFTP, SRTP, DHCP, DNS, DDNS, RTP, RTSP, RTCP, PPPoE, NTP, UPnP, SMTP, SNMP, IGMP, 802.1X, QoS, IPv4, IPv6, UDP, Bonjour, SSL/TLS, WebSocket, WebSockets
Simultaneous Live View	Up to 20 channels
API	ISAPI,SDK,ISUP,OTAP,ONVIF (Profile S, Profile G, Profile T, Profile M)
User/Host	Up to 32 users 3 user levels: administrator, operator, and user

Security	Password protection, complicated password, HTTPS encryption, 802.1X authentication (EAP-TLS, EAP-LEAP, EAP-MD5), watermark, IP address filter, basic and digest authentication for HTTP/HTTPS, WSSE and digest authentication for Open Network Video Interface, RTP/RTSP OVER HTTPS, Control Timeout Settings, Security Audit Log, TLS 1.2, TLS 1.3, TPM 2.0 (FIPS 140-2 level 2), AES128/256
Network Storage	NAS (NFS, SMB/CIFS),Auto Network Replenishment (ANR), Together with high-end Hikvision memory card, memory card encryption and health detection are supported.
Client	iVMS-4200,Hik-Connect,Hik-Central
Web Browser	Plug-in required live view: IE 10, IE 11, Plug-in free live view: Chrome 57.0+, Firefox 52.0+, Edge 89+, Safari 11+, Local service: Chrome 57.0+, Firefox 52.0+, Edge 89+
Image	
Image Parameters Switch	Yes
Image Settings	Rotate mode,saturation,brightness,contrast,sharpness,AGC,white balance,adjustable by client software or web browser
Day/Night Switch	Day,Night,Auto,Schedule,Alarm Trigger
Wide Dynamic Range (WDR)	140 dB
SNR	≥ 52 dB
Image Enhancement	BLC,HLC,3D DNR,Distortion Correction,Defog
Privacy Mask	8 programmable polygon privacy masks
Image Stabilization	EIS
Picture Overlay	LOGO picture can be overlaid on video with 128 × 128 24 bit bmp format.
Interface	
Video Output	1 Vp-p Composite Output (75 Ω/CVBS) (Only for debugging)
Ethernet Interface	1 RJ45 100 M/1000 M self-adaptive Ethernet port
On-Board Storage	Built-in memory card slot, support microSD/microSDHC/microSDXC card, up to 1 TB
Audio	1 input (line in), 1 output (line out), 3.5 mm connector
Alarm	2 inputs, 2 outputs (max. 24 VDC, 1 A)
RS-485	1 RS-485 (Half duplex, HIKVISION, Pelco-P, Pelco-D, self-adaptive)
Reset Key	Yes
Power Output	12 VDC, max. 100 mA
Event	
Basic Event	Motion detection (support alarm triggering by specified target types (human and vehicle)),video tampering alarm,exception (network disconnected, IP address conflict, illegal login, abnormal restart, HDD full, HDD error)
Smart Event	scene change detection,audio exception detection,defocus detection
Linkage	Upload to FTP/NAS/memory card,notify surveillance center,send email,trigger alarm output,trigger recording,trigger capture,audible warning
Deep Learning Function	
Perimeter Protection	Line crossing, intrusion, region entrance, region exiting Support alarm triggering by specified target types (human and vehicle) Support combined event alarm triggering
Metadata	Intrusion detection,line crossing detection,region entrance detection,region exiting detection,road traffic

Road Traffic and Vehicle Detection	Smart Function: Support license plate recognition of vehicles and motorcycles (only in checkpoint scenario) Support vehicle attribute detection, including vehicle type, color, brand, driving direction, etc. Support vehicle and non-vehicle counting Blocklist and allowlist: up to 10,000 records LPR Countries/Regions: 4 areas (Europe, Middle East, Asia-Pacific, Africa) and more than 124 countries/regions Accuracy (Under recommended installation and lighting conditions): License plate recognition rate ≥98% Capture rate ≥99% Driving direction accuracy rate ≥98% Vehicle Capture Speed: Front installation in checkpoint scenario: up to 120 km/h Side installation: up to 80 km/h Capture Mode: License Plate and Vehicle Mode, Vehicle Priority Mode
General	
Power	24 VDC ± 20%, 1.08 A, max. 25.9 W, three-core terminal block 24 VAC ± 20%, 1.67 A, max. 26.9 W, three-core terminal block PoE: IEEE 802.3bt, Type3, Class 5, 42.5 V to 57 V, 0.71 A to 0.55 A, max. 31.3W
Material	Aluminum alloy body, PP sun shield, PC front panel
Dimension	465.3 mm × 169.2 mm × 164.7 mm (18.3" × 6.7" × 6.5")
Package Dimension	615 mm × 360 mm × 225 mm (24.2" × 14.2" × 8.9")
Weight	Approx. 4485 g (9.89 lb.)
With Package Weight	Approx. 6875 g (15.2 lb.)
Storage Conditions	-40 °C to 65 °C (-40 °F to 149 °F). Humidity 95% or less (non-condensing)
Startup and Operating Conditions	-40 °C to 65 °C (-40 °F to 149 °F). Humidity 95% or less (non-condensing)
Language	33 languages: English, Russian, Estonian, Bulgarian, Hungarian, Greek, German, Italian, Czech, Slovak, French, Polish, Dutch, Portuguese, Spanish, Romanian, Danish, Swedish, Norwegian, Finnish, Croatian, Slovenian, Serbian, Turkish, Korean, Traditional Chinese, Thai, Vietnamese, Japanese, Latvian, Lithuanian, Portuguese (Brazil), Ukrainian
General Function	Heartbeat,one-key reset,mirror,password protection,pixel counter
Heater	Yes
Device Management	Supports adding alarm box (DS-FM2466) in the LAN to expand 6 additional input and 6 output alarm interfaces
Approval	
EMC	CE-EMC: EN 55032:2015+A1:2020, EN 50130-4:2011+A1:2014, EN IEC 61000-3-2:2019+A1:2021, EN 61000-3-3:2013+A1:2019+A2:2021, RCM: AS/NZS CISPR 32: 2015, IC: ICES-003: Issue 7, KC: KN32: 2015, KN35: 2015
Safety	CB: IEC 62368-1: 2014+A11, CE-LVD: EN 62368-1: 2014/A11: 2017, BIS: IS 13252 (Part 1): 2010/IEC 60950-1: 2005, LOA: IEC/EN 60950-1

Environment	CE-RoHS: 2011/65/EU, WEEE: 2012/19/EU, Reach: Regulation (EC) No 1907/2006
Protection	IP66: IEC 60529-2013,IK10: IEC 62262:2002
Anti-Corrosion Protection	With -Y: NEMA 4X(NEMA 250-2018)
Automotive and Railway	With -R: EN50121-4
Other	PVC FREE

▪ Typical Application

Hikvision products are classified into three levels according to their anti-corrosion performance. Refer to the following description to choose for your using environment.

With -Y model: This model has MODERATE PROTECTION.
Without -Y model: This model has NO SPECIFIC PROTECTION.

Level	Description
Top-level protection	Hikvision products at this level are equipped for use in areas where professional anti-corrosion protection is a must. Typical application scenarios include coastlines, docks, chemical plants, and more.
Moderate protection	Hikvision products at this level are equipped for use in areas with moderate anti-corrosion demands. Typical application scenarios include coastal areas about 2 kilometers (1.24 miles) away from coastlines, as well as areas affected by acid rain.
No specific protection	Hikvision products at this level are equipped for use in areas where no specific anti-corrosion protection is needed.

▪ Available Model

iDS-2CD7086G2/EP-IHSYR(11-40mm)
iDS-2CD7086G2/EP-IHSYR(3.8-16mm)

▪Dimension

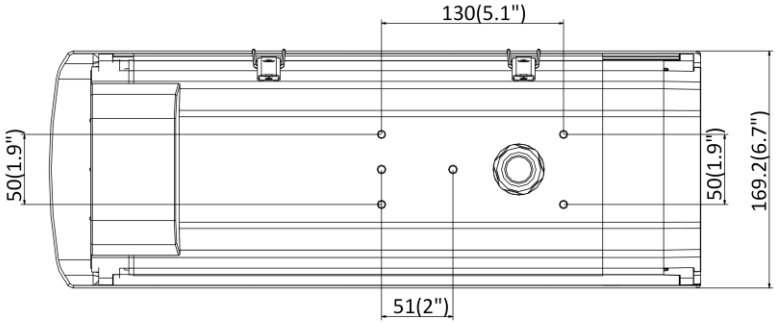

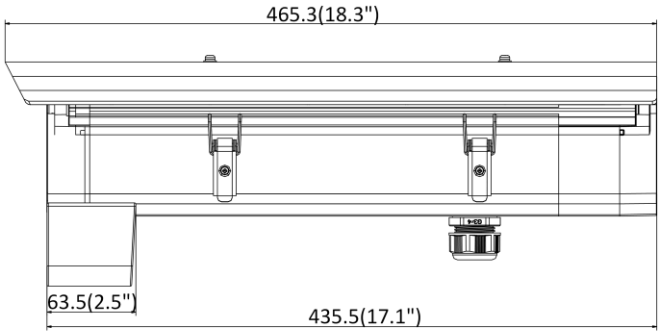

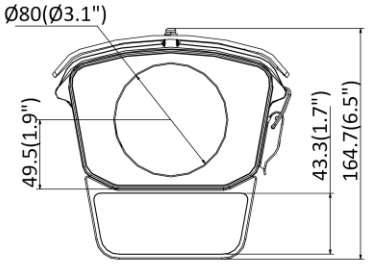

Unit: mm(inch)

▪ Accessory

▪Optional

DS-1269ZJ Pendant Mount	DS-1233ZJ Pendant Mount	DS-1214ZJ-L-Y2 Horizontal pole mount	DS-1214ZJ-T-Y Horizontal pole mount
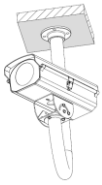	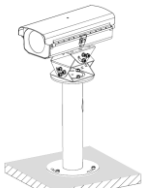	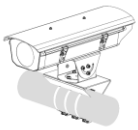	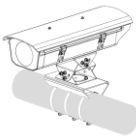

Headquarters
No.555 Qianmo Road, Binjiang District,
Hangzhou 310051, China
T +86-571-8807-5998
www.hikvision.com

Follow us on social media to get the latest product and solution information.

Hikvision HikvisionHQ HikvisionHQ Hikvision_Global Hikvision Corporate Channel hikvisionhq

© Hangzhou Hikvision Digital Technology Co., Ltd. Unless otherwise agreed, Hikvision makes no warranties, express or implied. We reserve the right to introduce modifications without notice.