HIKVISION

DS-2CD3343G3-LIUY(Black)

4 MP Acusense Smart Hybrid Light Fixed Turret Network Camera

AcuSense 3.0

Smart Hybrid Light

WDR H.265+ IP67

Hikvision has been dedicated to develop products with security since established. Hikvision always follows security by design principle and has adopted many methods of security technologies into our product development lifecycle, including terminal security, data security, application security, network security, and privacy protection. In the meantime, the security technologies used by Hikvision are all in compliance with local applicable laws and safety regulations. These security measures could enhance product's cyber security protection capability and protect your devices as well as your data from malicious cyber attacks.

- HikAI-ISP for excellent noise reduction effect
- High quality imaging with 4 MP resolution
- Acusense: Focus on human and vehicle classification based on deep learning
- Smart Hybrid Light: Integrates IR and White lights, 3 supplemental lighting modes
- Built-in dual microphone for real-time high quality audio security
- 130 dB WDR, support Auto mode, clear imaging against strong back light
- Water and dust resistant (IP67)
- -Y: Anti-corrosion design, providing reliability and longevity compared to standard (NEMA 4X)

▪ Specification

Camera	
Image Sensor	1/2.9" Progressive Scan CMOS
Max. Resolution	2688 × 1520
Min. Illumination	Color: 0.001 Lux @ (F1.6, AGC ON),B/W: 0 Lux with IR
Shutter Time	1 s to 1/100,000 s
Day & Night	IR cut filter
Angle Adjustment	Pan: 0° to 360°, tilt: 0° to 75°, rotate: 0° to 360°
Lens	
Lens Type	Fixed focal lens, 2.8, 4, and 6 mm optional
Focal Length & FOV	2.8 mm, horizontal FOV 103.6°, vertical FOV 57.2°, diagonal FOV 121.6° 4 mm, horizontal FOV 83.5°, vertical FOV 44.8°, diagonal FOV 99.9° 6 mm, horizontal FOV 51.8°, vertical FOV 27.9°, diagonal FOV 60.5°
Lens Mount	M12
Iris Type	Fixed
Aperture	F1.6
Depth of Field	2.8 mm: 1.4 m to ∞ 4 mm: 1.5 m to ∞ 6 mm: 3.5 m to ∞
DORI	
DORI	2.8 mm, O: 76.6 m, O: 38.3 m, D: 19.1 m, P: 12.3 m , C: 6.1 m, V: 3.1 m, S: 1.0 m 4 mm, O: 97.1 m, O: 48.5 m, D: 24.3 m, P: 15.5 m , C: 7.8 m, V: 3.9 m, S: 1.3 m 6 mm, O: 160.2 m, O: 80.1 m, D: 40.0 m, P: 25.6 m , C: 12.8 m, V: 6.4 m, S: 2.1 m
Illuminator	
Supplement Light Type	IR,White Light
Supplement Light Range	Up to 40 m
Smart Supplement Light	Yes
IR Wavelength	850 nm
Video	
Main Stream	50 Hz: 25 fps (2688 × 1520, 1920 × 1080, 1280 × 720) 60 Hz: 30 fps (2688 × 1520, 1920 × 1080, 1280 × 720)
Sub-Stream	50 Hz: 25 fps (1280 × 720 , 768 × 432, 640 × 360) 60 Hz: 30 fps (1280 × 720 , 768 × 432, 640 × 360)
Third Stream	50 Hz: 10 fps (1920 × 1080, 1280 × 720, 640 × 480, 640 × 360) 60 Hz: 10 fps (1920 × 1080, 1280 × 720, 640 × 480, 640 × 360) *Third stream is supported under certain settings.

Fourth Stream	50 Hz: 10 fps (1280 × 720, 640 × 480, 640 × 360) 60 Hz: 10 fps (1280 × 720, 640 × 480, 640 × 360) *Fourth stream is supported under certain settings.
Video Compression	Main stream: H.265/H.264/H.264+/H.265+, Sub-stream: H.265/H.264/MJPEG, Third stream: H.265/H.264, Fourth stream: H.265/H.264/MJPEG, *Third stream and fourth stream are supported under certain settings.
Video Bit Rate	32 Kbps to 8 Mbps
H.264 Type	Baseline Profile, Main Profile, High Profile
H.265 Type	Main Profile
Scalable Video Coding (SVC)	H.264 and H.265 encoding
Bit Rate Control	CBR,VBR
Region of Interest (ROI)	5 fixed regions for main stream and sub-stream
Target Cropping	NO
Audio	
Audio Compression	G.711/G.722.1/G.726/MP2L2/PCM/MP3/AAC-LC
Audio Bit Rate	64 Kbps (G.711ulaw/G.711alaw)/16 Kbps (G.722.1)/16 Kbps (G.726)/32 to 192 Kbps (MP2L2)/8 to 320 Kbps (MP3)/16 to 64 Kbps (AAC-LC)
Audio Sampling Rate	8 kHz/16 kHz/32 kHz/48 kHz
Environment Noise Filtering	Yes
Network	
Protocols	HTTP,PPPoE,SFTP,HTTPS,SSL/TLS,UPnP,RTCP,WebSockets,QoS,TCP/IP,IGMP,RTP,DHCP, ICMP,FTP,WebSocket,UDP,IPv4,DNS,NTP,IPv6,802.1X,RTSP,DDNS,SNMP
Simultaneous Live View	Up to 6 channels
API	ONVIF (Profile S, Profile G, Profile T),ISAPI,SDK,ISUP
Security	Password protection, complicated password, HTTPS encryption, IP address filter, Security Audit Log, basic and digest authentication for HTTP/HTTPS, TLS 1.1/1.2, WSSE and digest authentication for Open Network Video Interface
User/Host	Up to 32 users 3 user levels: administrator, operator, and user
Client	iVMS-4200, Hik-Connect, Hik-Central
Network Storage	NAS (NFS, SMB/CIFS),Auto Network Replenishment (ANR), Together with high-end Hikvision memory card, memory card encryption and health detection are supported.
Web Browser	Plug-in free live view: Chrome 91+, Firefox 88+, Edge 91+, Safari 13+, Local service: Chrome 91+, Firefox 88+, Edge 91+
Image	
Image Parameters Switch	Yes
Image Settings	Rotate mode,saturation,brightness,contrast,sharpness,gain,white balance,adjustable by client software or web browser
Day/Night Switch	Day, Night, Auto, Schedule
Wide Dynamic Range (WDR)	130 dB
SNR	≥ 52 dB

Image Enhancement	BLC, HLC, 3D DNR
Privacy Mask	8 programmable polygon privacy masks
Interface	
Ethernet Interface	1 RJ45 10 M/100 M self-adaptive Ethernet port
On-Board Storage	Built-in memory card slot, support microSD/microSDHC/microSDXC card, up to 512 GB
Reset Key	Yes
Audio	Built-in Microphone: Arrayed dual-microphone
Alarm	NA
Event	
Basic Event	Motion detection (support alarm triggering by specified target types (human, vehicle and animal)),video tampering alarm,exception
Smart Event	Unattended baggage detection, object removal detection, loitering detection, people gathering detection, fast moving detection, parking detection,video quality diagnosis
Linkage	notify surveillance center,send email,trigger recording,trigger capture
Deep Learning Function	
Face Capture	Yes
Perimeter Protection	Line crossing, intrusion, region entrance, region exiting Support alarm triggering by specified target types (human, vehicle and animal)
General	
Power	12 VDC ± 25%, 0.45 A, max. 5.5.0 W, Ø5.5 mm coaxial power plug, reverse polarity protection PoE: IEEE 802.3af, Class 3, max. 6.5 W
Material	metal
Dimension	Ø127.3 mm × 96.3 mm (Ø5.0" × 3.8")
Package Dimension	150 mm × 150 mm × 141 mm (5.9" × 5.9" × 5.6")
Weight	Approx. 0.595 kg (1.907 lb.)
With Package Weight	Approx. 0.790 kg (2.381 lb.)
Storage Conditions	-30 °C to 60 °C (-22 °F to 140 °F). Humidity 95% or less (non-condensing)
Startup and Operating Conditions	-30 °C to 60 °C (-22 °F to 140 °F). Humidity 95% or less (non-condensing)
Language	33 languages: English, Russian, Estonian, Bulgarian, Hungarian, Greek, German, Italian, Czech, Slovak, French, Polish, Dutch, Portuguese, Spanish, Romanian, Danish, Swedish, Norwegian, Finnish, Croatian, Slovenian, Serbian, Turkish, Korean, Traditional Chinese, Thai, Vietnamese, Japanese, Latvian, Lithuanian, Portuguese (Brazil), Ukrainian
General Function	Heartbeat,mirror,flash log,password reset via email,pixel counter,anti-banding
Approval	
EMC	CE-EMC: EN 55032:2015+A1:2020, EN 50130-4:2011+A1:2014, EN IEC 61000-3-2:2019+A1:2021, EN 61000-3-3:2013+A1:2019+A2:2021, RCM: AS/NZS CISPR 32: 2015, IC: ICES-003: Issue 7
Safety	UL: UL 62368-1, CB: IEC 62368-1: 2014+A11, CE-LVD: EN 62368-1: 2014/A11: 2017, BIS: IS 13252 (Part 1): 2010/IEC 60950-1: 2005, LOA: IEC/EN 60950-1

Environment	CE-RoHS: 2011/65/EU, WEEE: 2012/19/EU, Reach: Regulation (EC) No 1907/2006
Protection	IP67: IEC 60529-2013

▪ Typical Application

Hikvision products are classified into three levels according to their anti-corrosion performance. Refer to the following description to choose for your using environment.

This model has NO SPECIFIC PROTECTION.

Level	Description
Top-level protection	Hikvision products at this level are equipped for use in areas where professional anti-corrosion protection is a must. Typical application scenarios include coastlines, docks, chemical plants, and more.
Moderate protection	Hikvision products at this level are equipped for use in areas with moderate anti-corrosion demands. Typical application scenarios include coastal areas about 2 kilometers (1.24 miles) away from coastlines, as well as areas affected by acid rain.
No specific protection	Hikvision products at this level are equipped for use in areas where no specific anti-corrosion protection is needed.

▪ Dimension

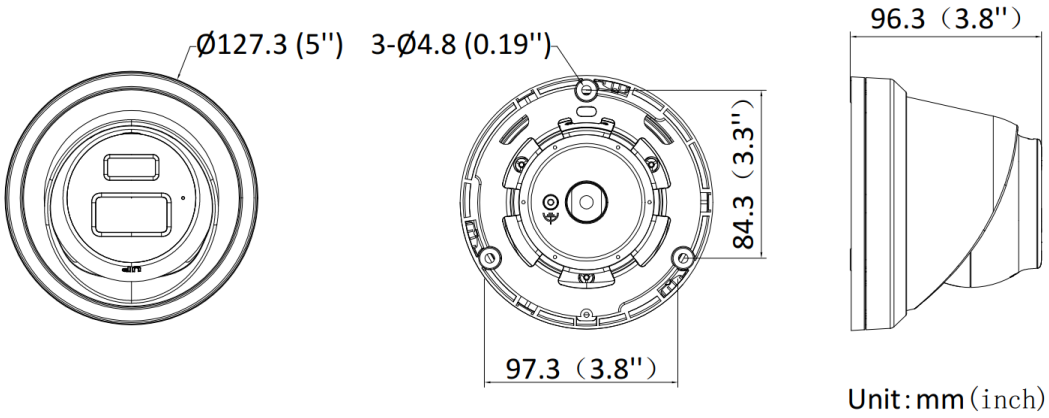

▪ Accessory

▪ Optional

DS-220AZJ-145-BAY	DS-1273ZJ-130-TRL-Y(Black)	DS-1280ZJ-DM8-Y(Black)	DS-1476ZJ-SUS(Black)	DS-1275ZJ-SUS(Black)

DS-1275ZJ-S-SUS(Black)	DS-1276ZJ-SUS(Black)	DS-1271ZJ-130-TRL-Y(Black)	DS-1281ZJ-M-Y(Black)	DS-1475ZJ-SUS(Black)
DS-220AZJ-130-BAY				

▪ Installation Methods

Wall Mounting DS-220AZJ-145-BAY	Wall Mounting DS-1273ZJ-130-TRL-Y(Black)	Wall Mounting DS-1280ZJ-DM8-Y(Black)	Wall Mounting DS-220AZJ-130-BAY	Corner Mounting DS-1476ZJ-SUS(Black) +DS-220AZJ-130-BAY
		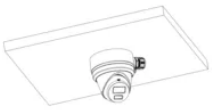		
Corner Mounting DS-1276ZJ-SUS(Black) +DS-1253ZJ-L(Black)+	Vertical Pole Mounting DS-1275ZJ-SUS(Black) +DS-1273ZJ-130-TRL(Black)+DS-1253ZJ-L(Black)	Vertical Pole Mounting DS-1275ZJ-S-SUS(Black)+DS-220AZJ-130-BAY	Vertical Pole Mounting DS-1475ZJ-SUS(Black) +DS-220AZJ-145-BAY	Pendant Mounting DS-1271ZJ-130-TRL-Y(Black)

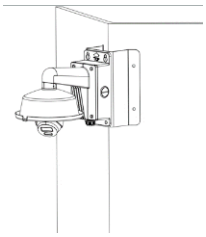	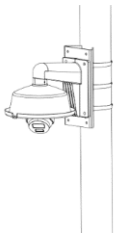			
Inclined Ceiling Mounting DS-1281ZJ-M-Y(Black)				

See Far, Go Further

www.hikvision.com
support@hikvision.com

© Hangzhou Hikvision Digital Technology Co., Ltd. Unless otherwise agreed, Hikvision makes no warranties, express or implied. We reserve the right to introduce modifications without notice.