HIKVISION

# DS-2CD2363G3-LIY

## 6 MP Acusense Smart Hybrid Light Fixed Turret Network Camera

AcuSense 3.0

Smart Hybrid Light

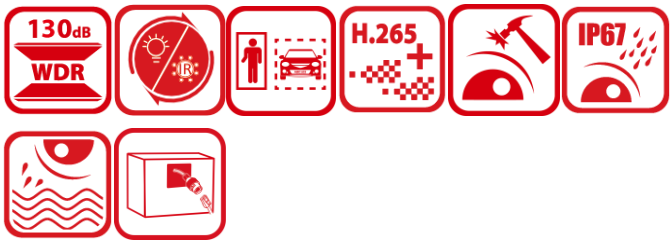


- High quality imaging with 6 MP resolution
- Upgraded imaging performance with Powered by DarkFighter
- Smart Hybrid Light: Smart Mode & IR Mode & White Light Mode
- Anti-corrosion design for stable protection (NEMA 4X)
- Person and vehicle classification based on deep learning
- 130 dB & AI WDR, upgraded performance, with auto on/off
- Crystal-clear audio with Arrayed Dual-Mic (-2U models)
- Dust and water resistant (IP67)

## ▪ Specification

| | |
|---|---|
| **Camera** | |
| Image Sensor | 1/2.4" Progressive Scan CMOS |
| Max. Resolution | 3200 × 1800 |
| Min. Illumination | Color: 0.003 Lux @ (F1.6, AGC ON),0 Lux with light |
| Shutter Time | 1/3 s to 1/100,000 s |
| Day & Night | IR cut filter |
| Angle Adjustment | Pan: 0° to 360°,tilt: 0° to 75°,rotate: 0° to 360° |
| **Lens** | |
| Lens Type | Fixed focal lens, 2.8 and 4 mm optional |
| Focal Length & FOV | 2.8 mm, horizontal FOV 105°, vertical FOV 55°, diagonal FOV 127°<br>4 mm, horizontal FOV 78°, vertical FOV 38°, diagonal FOV 96° |
| Lens Mount | M12 |
| Iris Type | Fixed |
| Aperture | F1.6 |
| Depth of Field | 2.8 mm: 1.8 m to ∞<br>4 mm: 3.1 m to ∞ |
| **DORI** | |
| DORI | 2.8 mm, O: 95.1 m, O: 47.5 m, D: 23.8 m, P: 15.2m , C: 7.6m, V: 3.8m, S: 1.3m<br>4 mm, O: 144.1 m, O: 72.1 m, D: 36.0 m, P: 23.1m , C: 11.5m, V: 5.8m, S: 1.9m |
| **Illuminator** | |
| Supplement Light Type | IR,White Light |
| Supplement Light Range | Up to 30 m |
| Smart Supplement Light | Yes |
| IR Wavelength | 850 nm |
| **Video** | |
| Main Stream | 50 Hz:<br>25 fps (3200 × 1800, 2688 × 1520, 1920 × 1080, 1280 × 720)<br>60 Hz:<br>30 fps (3200 × 1800, 2688 × 1520, 1920 × 1080, 1280 × 720) |
| Sub-Stream | 50 Hz: 25 fps (1280 × 720, 640 × 480, 640 × 360)<br>60 Hz: 30 fps (1280 × 720, 640 × 480, 640 × 360) |
| Third Stream | 50 Hz: 10 fps (1920 × 1080, 1280 × 720, 640 × 480, 640 × 360)<br>60 Hz: 10 fps (1920 × 1080, 1280 × 720, 640 × 480, 640 × 360)<br>*Third stream is supported under certain settings. |
| Video Compression | Main stream: H.265/H.264/H.264+/H.265+,<br>Sub-stream: H.265/H.264/MJPEG,<br>Third stream: H.265/H.264,<br>*Third stream is supported under certain settings. |
| Video Bit Rate | 32 Kbps to 16 Mbps |
| H.264 Type | Baseline Profile,Main Profile,High Profile |
| H.265 Type | Main Profile |
| Scalable Video Coding (SVC) | H.264 and H.265 encoding |
| Bit Rate Control | CBR,VBR |
| Region of Interest (ROI) | 1 fixed region for main stream and sub-stream |
| Target Cropping | Yes |

| | |
|---|---|
| **Audio** | |
| Audio Compression | -2U: G.711/G.722.1/G.726/MP2L2/PCM/MP3/AAC-LC |
| Audio Bit Rate | -2U: 64 Kbps (G.711ulaw/G.711alaw)/16 Kbps (G.722.1)/16 Kbps (G.726)/32 to 160 Kbps (MP2L2)/8 to 320 Kbps (MP3)/16 to 64 Kbps (AAC-LC) |
| Audio Sampling Rate | -2U: 8 kHz/16 kHz/32 kHz/48 kHz |
| Environment Noise Filtering | -2U: Yes |
| **Network** | |
| Protocols | TCP/IP, ICMP, HTTP, HTTPS, FTP, DHCP, DNS, DDNS, RTP, RTSP, RTCP, NTP, UPnP, SMTP, IGMP, 802.1X, QoS, IPv4, IPv6, UDP, Bonjour, SSL/TLS, PPPoE, SNMP, WebSocket, WebSockets |
| Simultaneous Live View | Up to 6 channels |
| API | ONVIF (Profile S, Profile G, Profile T),ISAPI,SDK,ISUP |
| User/Host | Up to 32 users<br>3 user levels: administrator, operator, and user |
| Security | Password protection, complicated password, HTTPS encryption, IP address filter, Security Audit Log, basic and digest authentication for HTTP/HTTPS, TLS 1.1/1.2/1.3, WSSE and digest authentication for Open Network Video Interface |
| Network Storage | NAS (NFS, SMB/CIFS),Auto Network Replenishment (ANR),<br>Together with high-end Hikvision memory card, memory card encryption and health detection are supported. |
| Client | iVMS-4200,Hik-Connect,Hik-Central |
| Web Browser | Plug-in required live view: IE 11,<br>Plug-in free live view: Chrome 80+, Firefox 80+, Edge 89+, Safari 13+,<br>Local service: Chrome 80+, Firefox 80+, Edge 89+, Safari 13+ |
| **Image** | |
| Image Parameters Switch | Yes |
| Image Settings | Rotate mode |
| Day/Night Switch | Day,Night,Auto,Schedule |
| Wide Dynamic Range (WDR) | 130 dB |
| SNR | ≥ 52 dB |
| Image Enhancement | BLC,HLC,3D DNR |
| Privacy Mask | 8 programmable polygon privacy masks |
| **Interface** | |
| Ethernet Interface | 1 RJ45 10 M/100 M self-adaptive Ethernet port |
| Audio | Built-in Microphone:<br>-2U: Arrayed dual-microphone |
| On-Board Storage | Built-in memory card slot, support microSD/microSDHC/microSDXC card, up to 512 GB |
| Reset Key | Yes |
| **Event** | |
| Basic Event | Motion detection (support alarm triggering by specified target types (human and vehicle and animal)),video tampering alarm,exception |
| Smart Event | Face detection |
| Linkage | Upload to FTP/NAS/memory card,notify surveillance center,send email,trigger recording,trigger capture |

| | |
|---|---|
| **Deep Learning Function** | |
| Perimeter Protection | Line crossing, intrusion, region entrance, region exiting<br>Support alarm triggering by specified target types (human and vehicle and animal) |
| **General** | |
| Power | 12 VDC ± 25%, 0.67 A, max. 8 W,Ø5.5 mm coaxial power plug,reverse polarity protection,<br>PoE: IEEE 802.3af, Class 3, max. 9.5 W |
| Material | Metal |
| Dimension | Ø127.3 mm × 96.3 mm (Ø5.01" × 3.79") |
| Package Dimension | 150 mm × 150 mm × 141 mm (5.91" × 5.91" × 5.55") |
| Weight | Approx. 0.61 kg (1.35 lb.) |
| With Package Weight | Approx. 0.805 kg (1.76 lb.) |
| Storage Conditions | -30 °C to 60 °C (-22 °F to 140 °F). Humidity 95% or less (non-condensing) |
| Startup and Operating Conditions | -30 °C to 60 °C (-22 °F to 140 °F). Humidity 95% or less (non-condensing) |
| Language | 33 languages: English, Russian, Estonian, Bulgarian, Hungarian, Greek, German, Italian, Czech, Slovak, French, Polish, Dutch, Portuguese, Spanish, Romanian, Danish, Swedish, Norwegian, Finnish, Croatian, Slovenian, Serbian, Turkish, Korean, Traditional Chinese, Thai, Vietnamese, Japanese, Latvian, Lithuanian, Portuguese (Brazil), Ukrainian |
| General Function | Heartbeat,mirror,flash log,password reset via email,pixel counter,anti-banding |
| **Approval** | |
| EMC | CE-EMC: EN 55032:2015+A1:2020, EN 50130-4:2011+A1:2014, EN IEC 61000-3-2:2019+A1:2021, EN 61000-3-3:2013+A1:2019+A2:2021,<br>RCM: AS/NZS CISPR 32: 2015,<br>IC: ICES-003: Issue 7,<br>KC: KN32: 2015, KN35: 2015 |
| Safety | CB: IEC 62368-1: 2014+A11,<br>CE-LVD: EN 62368-1: 2014/A11: 2017,<br>BIS: IS 13252 (Part 1): 2010/IEC 60950-1: 2005,<br>LOA: IEC/EN 60950-1 |
| Environment | CE-RoHS: 2011/65/EU,<br>WEEE: 2012/19/EU,<br>Reach: Regulation (EC) No 1907/2006 |
| Protection | IP67: IEC 60529-2013 |

## ▪ Typical Application

Hikvision products are classified into three levels according to their anti-corrosion performance. Refer to the following description to choose for your using environment.

This model has Moderate Protection.

| Level | Description |
|---|---|
| Top-level protection | Hikvision products at this level are equipped for use in areas where professional anti-corrosion protection is a must. Typical application scenarios include coastlines, docks, chemical plants, and more. |
| Moderate protection | Hikvision products at this level are equipped for use in areas with moderate anti-corrosion demands. Typical |

| | |
|---|---|
| | application scenarios include coastal areas about 2 kilometers (1.24 miles) away from coastlines, as well as areas affected by acid rain. |
| No specific protection | Hikvision products at this level are equipped for use in areas where no specific anti-corrosion protection is needed. |

## ▪ Dimension

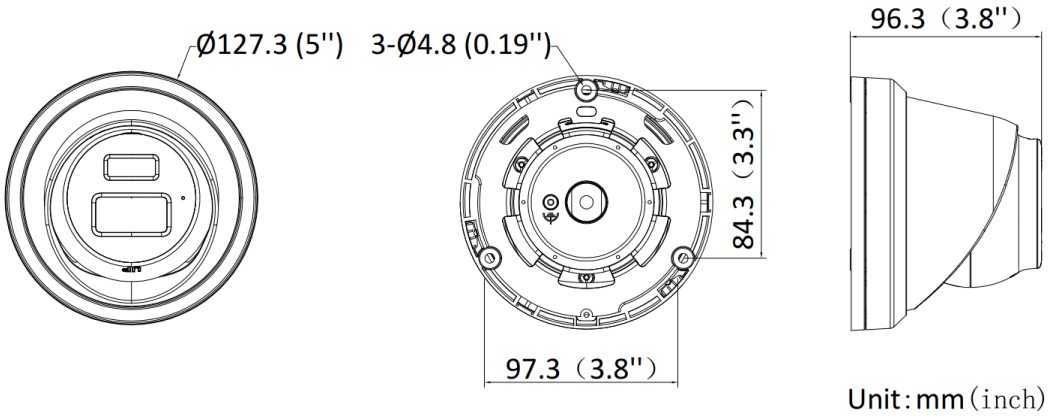


## ▪ Accessory

### ▪ Optional

| DS-1275ZJ-SUS | DS-1273ZJ-130B-TRL-Y | DS-1271ZJ-130-TRL-Y | DS-1276ZJ-SUS | DS-1273ZJ-130-TRL-Y |
|---|---|---|---|---|
| | | | | |
| **DS-1476ZJ-SUS** | **DS-1280ZJ-DM8-Y** | **DS-1475ZJ-SUS** | **DS-220AZJ-130-WAY** | **DS-1281ZJ-M-Y** |
| | 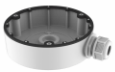 | | | |
| **DS-1275ZJ-S-SUS** | **DS-220AZJ-145-WAY** | | | |

| | |
|---|---|
| | |

## ▪ Installation Methods

| Vertical Pole Mounting DS-1275ZJ-SUS+DS-1273ZJ-130-TRL-Y | Vertical Pole Mounting DS-1475ZJ-SUS+DS-220AZJ-145-WAY | Vertical Pole Mounting DS-1275ZJ-S-SUS+DS-220AZJ-130-WAY | Wall Mounting DS-1273ZJ-130B-TRL-Y | Wall Mounting DS-1273ZJ-130-TRL-Y +DS-1253ZJ-L |
|---|---|---|---|---|
| 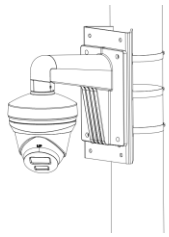 | | | | |
| **Wall Mounting DS-220AZJ-130-WAY** | **Wall Mounting DS-220AZJ-145-WAY** | **Pendant Mounting DS-1271ZJ-130-TRL-Y** | **Corner Mounting DS-1276ZJ-SUS+DS-1253ZJ-L+DS-1273ZJ-130B-TRL-Y** | **Corner Mounting DS-1476ZJ-SUS+DS-220AZJ-130-WAY** |
| | | | 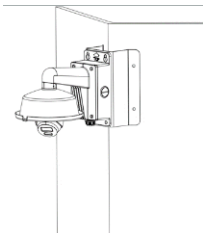 | |
| **Junction Box DS-1280ZJ-DM8-Y** | **Inclined Ceiling Mounting DS-1281ZJ-M-Y** | | | |
| | | | | |

See Far, Go Further

www.hikvision.com
support@hikvision.com

© Hangzhou Hikvision Digital Technology Co., Ltd. Unless otherwise agreed, Hikvision makes no warranties, express or implied. We reserve the right to introduce modifications without notice.