HIKVISION

DS-2CD2143G3-LIS2UY(Black)

4 MP Acusense Smart Hybrid Light Fixed Dome Network Camera

AcuSense 3.0

Smart Hybrid Light

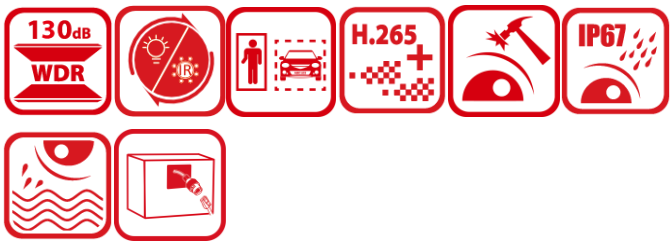

- High quality imaging with 4 MP resolution
- Upgraded imaging performance with Powered by DarkFighter
- Smart Hybrid Light: Smart Mode & IR Mode & White Light Mode
- Anti-corrosion design for stable protection (NEMA 4X)
- Person and vehicle classification based on deep learning
- 130 dB & AI WDR, upgraded performance, with auto on/off
- Crystal-clear audio with Arrayed Dual-Mic (-2U models)
- Dust and water resistant (IP67), and vandal resistant (IK10)
- Audio and alarm interface available (-S models)

▪ Specification

Camera	
Image Sensor	1/2.9" Progressive Scan CMOS
Max. Resolution	2688 × 1520
Min. Illumination	Color: 0.001 Lux @ (F1.6, AGC ON),0 Lux with light
Shutter Time	1 s to 1/100,000 s
Day & Night	IR cut filter
Angle Adjustment	Pan: 0° to 355°,tilt: 0° to 75°,rotate: 0° to 355°
Lens	
Lens Type	Fixed focal lens, 2.8 and 4 mm optional
Focal Length & FOV	2.8 mm, horizontal FOV 104°, vertical FOV 57°, diagonal FOV 122° 4 mm, horizontal FOV 84°, vertical FOV 45°, diagonal FOV 100°
Lens Mount	M12
Iris Type	Fixed
Aperture	F1.6
Depth of Field	2.8 mm: 1.4 m to ∞ 4 mm: 1.5 m to ∞
DORI	
DORI	2.8 mm, O: 76.6 m, O: 38.3 m, D: 19.1 m, P: 12.3 m , C: 6.1 m, V: 3.1 m, S: 1.0 m 4 mm, O: 97.1 m, O: 48.5 m, D: 24.3 m, P: 15.5 m , C: 7.8 m, V: 3.9 m, S: 1.3 m
Illuminator	
Supplement Light Type	IR,White Light
Supplement Light Range	Up to 30 m
Smart Supplement Light	Yes
IR Wavelength	850 nm
Video	
Main Stream	50 Hz: 25 fps (2688 × 1520, 1920 × 1080, 1280 × 720) 60 Hz: 30 fps (2688 × 1520, 1920 × 1080, 1280 × 720)
Sub-Stream	50 Hz: 25 fps (1280 × 720 , 768 × 432, 640 × 360) 60 Hz: 30 fps (1280 × 720 , 768 × 432, 640 × 360)
Third Stream	50 Hz: 10 fps (1920 × 1080, 1280 × 720, 640 × 480, 640 × 360) 60 Hz: 10 fps (1920 × 1080, 1280 × 720, 640 × 480, 640 × 360) *Third stream is supported under certain settings.
Video Compression	Main stream: H.265/H.264/H.264+/H.265+, Sub-stream: H.265/H.264/MJPEG, Third stream: H.265/H.264, *Third stream is supported under certain settings.
Video Bit Rate	32 Kbps to 8 Mbps
H.264 Type	Baseline Profile,Main Profile,High Profile
H.265 Type	Main Profile
Scalable Video Coding (SVC)	H.264 and H.265 encoding

Bit Rate Control	CBR,VBR
Region of Interest (ROI)	1 fixed region for main stream and sub-stream
Target Cropping	NO
Audio	
Audio Compression	-2U: G.711/G.722.1/G.726/MP2L2/PCM/MP3/AAC-LC
Audio Bit Rate	-2U: 64 Kbps (G.711ulaw/G.711alaw)/16 Kbps (G.722.1)/16 Kbps (G.726)/32 to 160 Kbps (MP2L2)/8 to 320 Kbps (MP3)/16 to 64 Kbps (AAC-LC)
Audio Sampling Rate	-2U: 8 kHz/16 kHz/32 kHz/48 kHz
Environment Noise Filtering	-2U: Yes
Network	
Protocols	TCP/IP, ICMP, HTTP, HTTPS, FTP, DHCP, DNS, DDNS, RTP, RTSP, RTCP, NTP, UPnP, SMTP, IGMP, 802.1X, QoS, IPv4, IPv6, UDP, SSL/TLS, PPPoE, SNMP, WebSocket, WebSockets
Simultaneous Live View	Up to 6 channels
API	ONVIF (Profile S, Profile G, Profile T),ISAPI,SDK,ISUP
User/Host	Up to 32 users 3 user levels: administrator, operator, and user
Security	Password protection, complicated password, HTTPS encryption, IP address filter, Security Audit Log, basic and digest authentication for HTTP/HTTPS, TLS 1.1/1.2/1.3, WSSE and digest authentication for Open Network Video Interface
Client	iVMS-4200,Hik-Connect,Hik-Central
Network Storage	NAS (NFS, SMB/CIFS),Auto Network Replenishment (ANR), Together with high-end Hikvision memory card, memory card encryption and health detection are supported.
Web Browser	Plug-in free live view: Chrome 91+, Firefox 88+, Edge 91+, Safari 13+, Local service: Chrome 91+, Firefox 88+, Edge 91+
Image	
Image Parameters Switch	Yes
Day/Night Switch	Day,Night,Auto,Schedule
Image Settings	Rotate mode,saturation,brightness,contrast,sharpness,gain,white balance,adjustable by client software or web browser
Wide Dynamic Range (WDR)	130 dB
SNR	≥ 52 dB
Image Enhancement	BLC,HLC,3D DNR
Privacy Mask	4 programmable polygon privacy masks
Interface	
Ethernet Interface	1 RJ45 10 M/100 M self-adaptive Ethernet port
Audio	-2U: Built-in Microphone: Arrayed dual-microphone -S: 1 input (line in), two-core terminal block, max. input amplitude: 3.3 Vpp, input impedance: 4.7 KΩ, interface type: non-equilibrium 1 output (line out), two-core terminal block, max. output amplitude: 3.3 Vpp, output impedance: 100 Ω, interface type: non-equilibrium
On-Board Storage	Built-in memory card slot, support microSD/microSDHC/microSDXC card, up to 512 GB
Alarm	-S: 1 input, 1 output (max. 12 VDC, 30 mA)
Reset Key	Yes

Event	
Basic Event	Motion detection (support alarm triggering by specified target types (human, vehicle and animal)),video tampering alarm,exception
Smart Event	NA
Linkage	Upload to FTP/NAS/memory card,notify surveillance center,send email,trigger recording,trigger capture,-S: trigger alarm output
Deep Learning Function	
Face Capture	Yes
Perimeter Protection	Line crossing, intrusion, region entrance, region exiting Support alarm triggering by specified target types (human, vehicle and animal)
General	
Power	12 VDC ± 25%, 0.6 A, max. 7.2 W,Ø5.5 mm coaxial power plug,reverse polarity protection, PoE: IEEE 802.3af, Class 3, max. 8.5 W
Material	Base: aluminum alloy, cover: aluminum alloy
Dimension	Ø121.5 mm × 97.6 mm (Ø4.78" × 3.84")
Package Dimension	150 mm × 150 mm × 141 mm (5.91" × 5.91" × 5.55")
Weight	Approx. 600 g (1.3 lb.)
With Package Weight	Approx. 830 g (1.8 lb.)
Storage Conditions	-30 °C to 60 °C (-22 °F to 140 °F). Humidity 95% or less (non-condensing)
Startup and Operating Conditions	-30 °C to 60 °C (-22 °F to 140 °F). Humidity 95% or less (non-condensing)
Language	33 languages: English, Russian, Estonian, Bulgarian, Hungarian, Greek, German, Italian, Czech, Slovak, French, Polish, Dutch, Portuguese, Spanish, Romanian, Danish, Swedish, Norwegian, Finnish, Croatian, Slovenian, Serbian, Turkish, Korean, Traditional Chinese, Thai, Vietnamese, Japanese, Latvian, Lithuanian, Portuguese (Brazil), Ukrainian
General Function	Heartbeat,mirror,flash log,password reset via email,pixel counter,anti-banding
Approval	
EMC	CE-EMC: EN 55032:2015+A1:2020, EN 50130-4:2011+A1:2014, EN IEC 61000-3-2:2019+A1:2021, EN 61000-3-3:2013+A1:2019+A2:2021, RCM: AS/NZS CISPR 32: 2015, IC: ICES-003: Issue 7, KC: KN32: 2015, KN35: 2015
Safety	CB: IEC 62368-1: 2014+A11, CE-LVD: EN 62368-1: 2014/A11: 2017, BIS: IS 13252 (Part 1): 2010/IEC 60950-1: 2005, LOA: IEC/EN 60950-1
Environment	CE-RoHS: 2011/65/EU, WEEE: 2012/19/EU, Reach: Regulation (EC) No 1907/2006
Protection	IP67: IEC 60529-2013,IK10: IEC 62262:2002

▪ Typical Application

Hikvision products are classified into three levels according to their anti-corrosion performance. Refer to the following description to choose for your using environment.

This model has Moderate Protection.

Level	Description
Top-level protection	Hikvision products at this level are equipped for use in areas where professional anti-corrosion protection is a must. Typical application scenarios include coastlines, docks, chemical plants, and more.
Moderate protection	Hikvision products at this level are equipped for use in areas with moderate anti-corrosion demands. Typical application scenarios include coastal areas about 2 kilometers (1.24 miles) away from coastlines, as well as areas affected by acid rain.
No specific protection	Hikvision products at this level are equipped for use in areas where no specific anti-corrosion protection is needed.

▪ Dimension

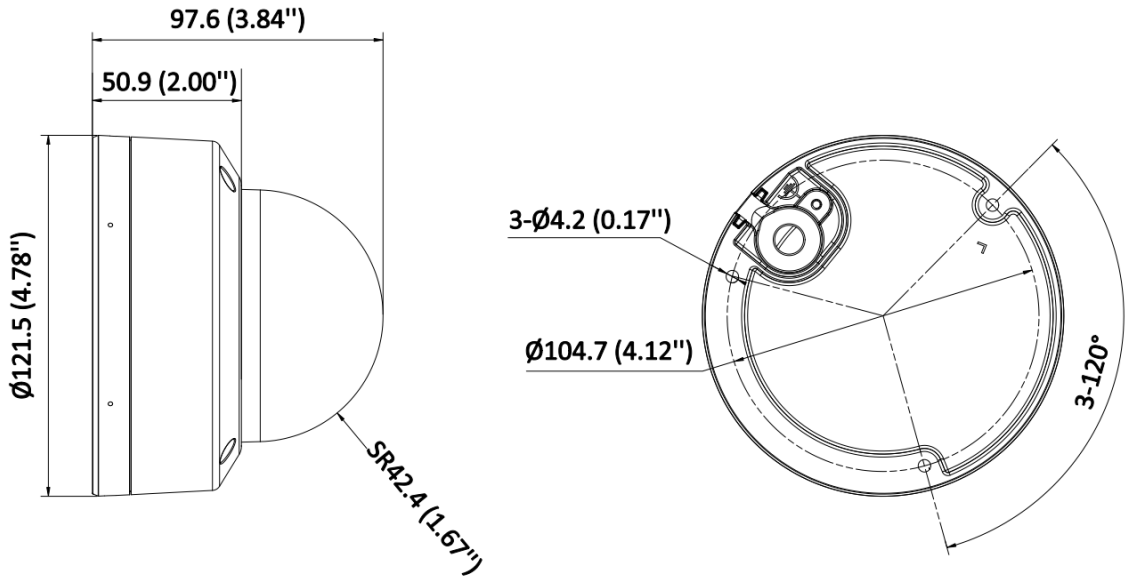

Unit: mm (inch)

▪ Accessory

▪ Optional

DS-1271ZJ-120-Y(Black)	DS-1272ZJ-120B-Y(Black)	DS-1275ZJ-S-SUS(Black)	DS-1276ZJ-SUS(Black)	DS-1476ZJ-SUS(Black)
DS-1275ZJ-SUS(Black)	DS-1272ZJ-120-Y(Black)	DS-220AZJ-130-BAY	DS-1280ZJ-DM46-Y (Black)	DS-1475ZJ-SUS(Black)

DS-220AZJ-145-BAY				

▪ Installation Methods

Pendant Mounting DS-1271ZJ-120-Y(Black)+DS-1280ZJ-DM46-Y(Black)	Wall Mounting DS-1272ZJ-120B-Y(Black)+DS-1253ZJ-M(Black)	Wall Mounting DS-1272ZJ-120-Y(Black)+DS-1253ZJ-M(Black)	Wall Mounting DS-220AZJ-130-BAY	Wall Mounting DS-220AZJ-145-BAY
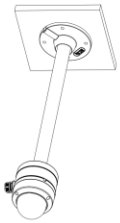	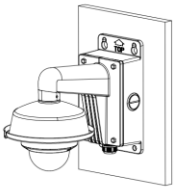			
Vertical Pole Mounting DS-1275ZJ-S-SUS(Black)+DS-220AZJ-130-BAY	**Vertical Pole Mounting DS-1275ZJ-SUS(Black)+DS-1272ZJ-120-Y(Black)**	**Vertical Pole Mounting DS-1475ZJ-SUS(Black)+DS-220AZJ-130-BAY**	**Corner Mounting DS-1276ZJ-SUS(Black)+DS-1272ZJ-120-Y(Black)+DS-1253ZJ-M(Black)**	**Corner Mounting DS-1476ZJ-SUS(Black)+DS-220AZJ-130-BAY**
	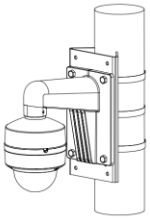		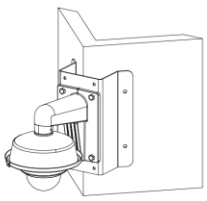	
Junction Box DS-1280ZJ-DM46-Y(Black)				

See Far, Go Further

www.hikvision.com
support@hikvision.com

© Hangzhou Hikvision Digital Technology Co., Ltd. Unless otherwise agreed, Hikvision makes no warranties, express or implied. We reserve the right to introduce modifications without notice.