DS-2DE5425WG1-E

4 MP 25X Powered by DarkFighter Acusense Network Speed Dome

Hikvision DS-2DE5425WG1-E 4 MP 25 × Network Speed Dome adopts 1/2.8" progressive scan CMOS chip. With the 25 × optical zoom lens, the camera offers more details over expansive areas.
This series of cameras can be widely used for wide ranges of high-definition, such as rivers, roads, railways, airports, squares, parks, scenic spots, and venues, etc.

- HIK AI-ISP for excellent noise reduction effect
- High focus speed with self-learning focus technology keep the picture clear every single second
- High quality imaging with 4 MP resolution
- 1/2.8" Progressive Scan CMOS
- 25× optical zoom and 16× digital zoom provide close up views over expansive areas
- WDR, HLC, BLC, 3D DNR, defog, regional exposure, regional focus
- 36 VDC & 24VAC & PoE (802.3at)
- Water and dust resistant (IP66) and vandal resistant (IK10)
- Support link to hikvision network speakers and network microphones to play audio
- Improve playback efficiency and be compatible with the AcuSeek and AcuSearch technologies of NVR for combined use

▪ Specification

Camera	
Image Sensor	1/2.8" Progressive Scan CMOS
Max. Resolution	2560 × 1440
Min. Illumination	Color: 0.005 Lux @ (F1.6, AGC ON); B/W: 0.001 Lux @ (F1.6, AGC ON)
Shutter Speed	1 s to 1/30,000 s
Day & Night	IR cut filter
Zoom	25x optional, 16x digital
Slow Shutter	Yes
Lens	
Focal Length	4.8 mm to 120 mm
FOV	Horizontal field of view: 57.6° to 2.5° (wide-tele), Vertical field of view: 34.4° to 1.4° (wide-tele), Diagonal field of view: 64.5° to 2.9° (wide-tele)
Focus	Auto, semi-auto, manual
Aperture	Max. F1.6
Zoom Speed	Approx. 3.6 s
PTZ	
Movement Range (Pan)	360°
Movement Range (Tilt)	-5° to 90° (auto flip)
Pan Speed	Pan speed: configurable from 0.1° to 250°/s; preset speed: 300°/s
Tilt Speed	Tilt speed: configurable from 0.1° to 150°/s, preset speed 200°/s
Proportional Pan	Yes
Presets	300
Preset Freezing	Yes
Patrol Scan	8 patrols, up to 32 presets for each patrol
Pattern Scan	4 pattern scans
Park Action	Preset, pattern scan, patrol scan, auto scan, tilt scan, random scan, frame scan, panorama scan
3D Positioning	Yes
PTZ Status Display	Yes
Scheduled Task	Preset, pattern scan, patrol scan, auto scan, tilt scan, random scan, frame scan, panorama scan, dome reboot, dome adjust, aux output
Power-off Memory	Yes
Video	
Main Stream	50 Hz: 25 fps (2560 × 1440, 1920 × 1080, 1280 × 960, 1280 × 720) 60 Hz: 30 fps (2560 × 1440, 1920 × 1080, 1280 × 960, 1280 × 720)
Sub-Stream	50 Hz: 25 fps (704 × 576, 640 × 480, 352 × 288) 60 Hz: 30 fps (704 × 480, 640 × 480, 352 × 240)
Third Stream	50 Hz: 25 fps (1920 × 1080, 1280 × 960, 1280 × 720, 704 × 576, 640 × 480, 352 × 288) 60 Hz: 30 fps (1920 × 1080, 1280 × 960, 1280 × 720, 704 × 480, 640 × 480, 352 × 240)
Video Compression	Main stream: H.265+/H.265/H.264+/H.264 Sub-stream: H.265/H.264/MJPEG Third stream: H.265/H.264/MJPEG
Video Bit Rate	32 Kbps to 16 Mbps
H.264 Type	Baseline profile/Main profile/High profile

H.265 Type	Main profile
Scalable Video Coding (SVC)	H.264 and H.265 encoding
Region of Interest (ROI)	8 fixed regions for each stream
AI Encoding	No
Audio	
Audio Compression	G.711/G.722.1/G.726/MP2L2/PCM
Audio Bit Rate	64 Kbps (G.711)/16 Kbps (G.722.1)/16 Kbps (G.726)/32-192 Kbps (MP2L2)
Audio Sampling Rate	8 kHz/16 kHz/32 kHz/48 kHz
Environment Noise Filtering	Yes
Network	
Protocols	IPv4/IPv6, HTTP, HTTPS, 802.1x, Qos, FTP, SMTP, UPnP, SNMP, DNS, DDNS, NTP, RTSP, RTCP, RTP, TCP/IP, UDP, IGMP, ICMP, DHCP, PPPoE, Bonjour
Simultaneous Live View	Up to 20 channels
API	Open Network Video Interface (Version 19.12, Profile S, Profile G, Profile T), ISAPI, SDK, ISUP
User/Host	Up to 32 users; 3 user levels: administrator, operator, and user
Security	Password protection, complicated password, HTTPS encryption, 802.1X authentication (EAP-TLS, EAP-LEAP, EAP-MD5), watermark, IP address filter, basic and digest authentication for HTTP/HTTPS, control timeout settings, security audit log, TLS 1.2, host authentication (MAC address)
Network Storage	NAS (NFS, SMB/CIFS), auto network replenishment (ANR)
Client	iVMS-4200, HikCentral Pro, Hik-Connect
Web Browser	Chrome 80+, Firefox 80+, Safari 13+, Edge 89+
Image	
Image Parameters Switch	Yes
Image Settings	Saturation, brightness, contrast, sharpness, gain, and white balance adjustable by client software or web browser
Day/Night Switch	Day, Night, Auto, Schedule
Wide Dynamic Range (WDR)	120 dB
SNR	> 52 dB
Defog	Digital Defog
Image Enhancement	BLC, HLC, 3D DNR
Privacy Mask	24 programmable polygon privacy masks, mask color or mosaic configurable
Regional Focus	Yes
Regional Exposure	Yes
VR View	360° Real Scene Stitched Panoramic Image
Interface	
Ethernet Interface	1 RJ45 10M/100M self-adaptive Ethernet port
On-board Storage	Built-in memory card slot, support microSD/SDHC/SDXC card, up to 256 GB
Audio	1 input (line in), max. input amplitude: 2-2.4 vpp, input impedance: 1 KΩ ± 10%; 1 output (line out), line level, output impedance: 600 Ω
Alarm	2 inputs, 1 output
Reset	Yes
Event	
Basic Event	Motion detection, video tampering alarm, exception, alarm input and output

Smart Event	line crossing detection, intrusion detection, region entrance detection, region exiting detection, unattended baggage detection, object removal detection, audio exception detection
Linkage	Upload to FTP/NAS/memory card, notify surveillance center, send email, trigger alarm output, trigger recording, and PTZ actions (such as preset, patrol scan, pattern scan)
Deep Learning Function	
Face Capture	Yes
Linkage and Tracking	
Smart Tracking	Manual tracking, auto-tracking
General	
Power	36 VDC, Max.20 W 24 VAC, Max.20 W PoE (802.3at)
Dimension	Ø 220 mm × 280 mm (Ø 8.66" × 11.02")
Weight	Approx. 3.0 kg (6.61 lb.)
Material	ADC 12, PC+ABS, PC/PMMA
Operating Condition	-30 °C to 65 °C (-22 °F to 149 °F). Humidity 90% or less (non-condensing)
Approval	
EMC	CE-EMC (EN 55032:2015+A1:2020, EN 50130-4:2011+A1:2014, EN IEC 61000-3-2:2019+A1:2021+A2:2024, EN 61000-3-3:2013+A1:2019+A2:2021),RCM (AS/NZS CISPR 32: 2015)
Safety	CB (IEC 62368-1:2014), CE-LVD (EN 62368-1:2014 + A11:2017)
Environment	CE-RoHS (2011/65/EU); WEEE (2012/19/EU); Reach (Regulation (EC) No 1907/2006)
Protection	TVS 6000 V lightning protection, surge protection and voltage transient protection

▪ DORI

The DORI (detect, observe, recognize, identify) distance gives the general idea of the camera ability to distinguish persons or objects within its field of view.
It is calculated based on the camera sensor specification and the criteria given by EN 62676-4:2015.

DORI	Detect	Observe	Recognize	Identify
Definition	25 px/m	63 px/m	125 px/m	250 px/m
Distance (Tele)	2402.4 m (7881.9 ft)	953.3 m (3127.7 ft)	480.5 m (1576.4 ft)	240.2 m (788.2 ft)
Distance (Wide)	96.1 m (315.3 ft)	38.1 m (125.1 ft)	19.2 m (63.1 ft)	9.6 m (31.5 ft)

▪ Typical Application

Hikvision products are classified into three levels according to their anti-corrosion performance. Refer to the following description to choose for your using environment.

This model has NO SPECIFIC PROTECTION.

Level	Description
Top-level protection	Hikvision products at this level are equipped for use in areas where professional anti-corrosion protection is a must. Typical application scenarios include coastlines, docks, chemical plants, and more.
Moderate protection	Hikvision products at this level are equipped for use in areas with moderate anti-corrosion demands. Typical application scenarios include coastal areas about 2

	kilometers (1.24 miles) away from coastlines, as well as areas affected by acid rain.
No specific protection	Hikvision products at this level are equipped for use in areas where no specific anti-corrosion protection is needed.

▪ Dimension

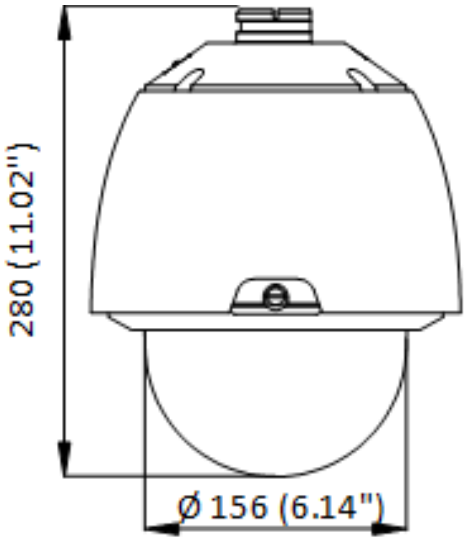

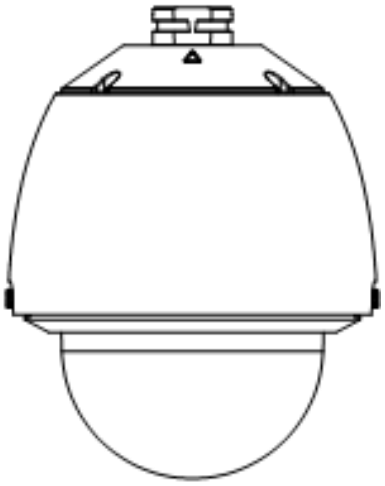

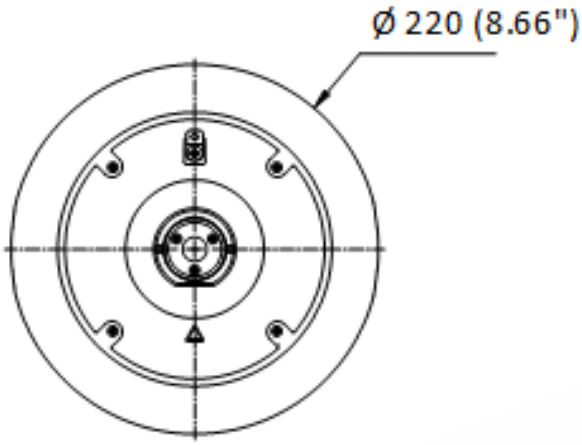

Unit: mm (inch)

▪ Accessory

▪ Optional

DS-1673ZJ	DS-1602ZJ	DS-1619ZJ	DS-1667ZJ	DS-1604ZJ-pole

DS-1662ZJ	DS-1276ZJ	DS-1604ZJ-BOX-CORNER	DS-1663ZJ	DS-1604ZJ-box
DS-1604ZJ-corner	**DS-1661ZJ**	**DS-1660ZJ**	**DS-1604ZJ-BOX-POLE**	**DS-1674ZJ**
DS-4650ZJ-WC	**DS-1684ZJ**	**DS-4660ZJ-WC**	**DS-1604ZJ**	

▪ Installation Methods

Horizontal Pole Mounting DS-1673ZJ+DS-1663ZJ	Wall Mounting DS-1602ZJ	Wall Mounting DS-1604ZJ-box	Wall Mounting DS-1604ZJ	Gooseneck Mounting DS-1619ZJ
	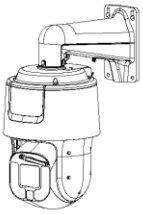	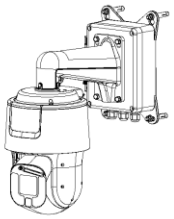	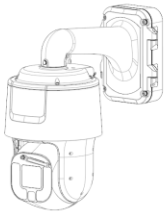	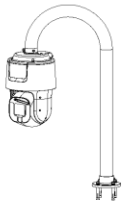
Gooseneck Mounting DS-1660ZJ	**Pendant Mounting DS-1667ZJ**	**Pendant Mounting DS-1662ZJ**	**Pendant Mounting DS-1663ZJ**	**Pendant Mounting DS-1661ZJ**
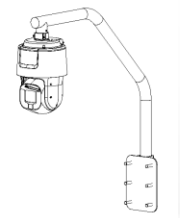			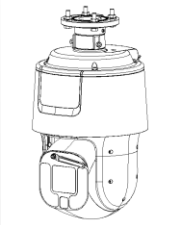	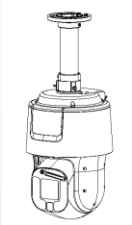

Vertical Pole Mounting DS-1604ZJ-pole	Vertical Pole Mounting DS-1604ZJ-BOX-POLE	Vertical Pole Mounting DS-4650ZJ-WC+DS-1674ZJ+DS-1602ZJ	Vertical Pole Mounting DS-1684ZJ+DS-1602ZJ	Corner Mounting DS-1276ZJ+DS-1602ZJ
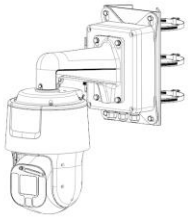			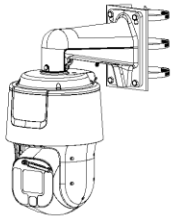	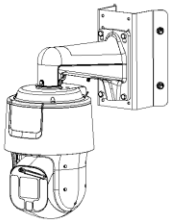
Corner Mounting DS-1604ZJ-BOX-CORNER	**Corner Mounting DS-1604ZJ-corner**	**Corner Mounting DS-4660ZJ-WC+DS-1602ZJ+DS-1674ZJ**	**Junction Box DS-1674ZJ+DS-1602ZJ**	
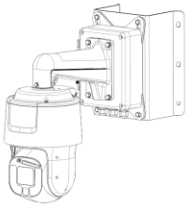	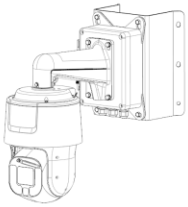	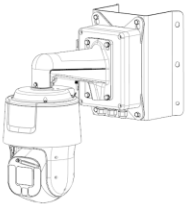	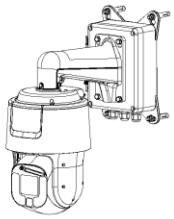	

See Far, Go Further

www.hikvision.com
support@hikvision.com

© Hangzhou Hikvision Digital Technology Co., Ltd. Unless otherwise agreed, Hikvision makes no warranties, express or implied. We reserve the right to introduce modifications without notice.