HIKVISION

DS-2CD1343G3-LIU
4 MP Smart Hybrid Light 3.0 Fixed Turret Network Camera

Smart Hybrid Light

IP67

- Enhanced Image Quality: delivers better imaging performance
- Motion Detection 3.0: focuses on person and vehicle classification based on deep learning
- Smart Hybrid Light: integrates IR and white lights, 3 supplemental lighting modes
- Built-in microphone for real-time audio security
- Dust and water resistant (IP67)

▪ Specification

Camera	
Image Sensor	1/3" Progressive Scan CMOS
Max. Resolution	2688 × 1520
Min. Illumination	Color: 0.003 Lux @ (F1.6, AGC ON),B/W: 0 Lux with IR
Shutter Time	1 s to 1/100,000 s
Day & Night	IR cut filter
Angle Adjustment	Pan: 0° to 360°,tilt: 0° to 75°,rotate: 0° to 360°
Lens	
Lens Type	Fixed focal lens, 2.8 and 4 mm optional
Focal Length & FOV	2.8 mm, Horizontal FOV:103°, Vertical FOV:57°, Diagonal FOV:121° 4 mm, Horizontal FOV:83°, Vertical FOV:42°, Diagonal FOV:100°
Lens Mount	M12
Iris Type	Fixed
Focus	NA
Aperture	F1.6
Depth of Field	2.8 mm: 1.3 m to ∞ 4 mm: 1.6 m to ∞
Pixel Density	
O2DCPVS	2.8 mm: Overview: 76.6 m, Outline: 38.3 m, Discern: 19.1 m, Perceive: 12.3 m, Characterize: 6.1 m, Validate: 3.1 m, Scrutinize: 1 m 4 mm: Overview: 106.9 m, Outline: 53.4 m, Discern: 26.7 m, Perceive: 17.1 m, Characterize: 8.5 m, Validate: 4.3 m, Scrutinize: 1.4 m
Illuminator	
Supplement Light Type	IR,White Light
Supplement Light Range	Up to 30 m
Smart Supplement Light	Yes
IR Wavelength	850 nm
Video	
Main Stream	50 Hz: 25 fps (2688 × 1520, 2560 × 1440, 1920 × 1080, 1280 × 720) 60 Hz: 24 fps (2688 × 1520, 2560 × 1440, 1920 × 1080, 1280 × 720)
Sub-Stream	50 Hz: 25 fps (1280 × 720, 640 × 480, 640 × 360) 60 Hz: 24 fps (1280 × 720, 640 × 480, 640 × 360)
Third Stream	NA
Video Compression	Main stream: H.265+/H.265/H.264+/H.264 Sub-stream: H.265/H.264/MJPEG
Video Bit Rate	32 Kbps to 16 Mbps
H.264 Type	Baseline Profile,Main Profile,High Profile
H.265 Type	Main Profile
Bit Rate Control	CBR,VBR
Scalable Video Coding (SVC)	YES
Region of Interest (ROI)	1 fixed regions for each stream
Target Cropping	NO
Audio	
Audio Type	Mono sound
Audio Compression	-U: G.711/G.722.1/G.726/MP2L2/PCM/MP3/AAC-LC

Audio Bit Rate	-U:64 Kbps (G.711ulaw/G.711alaw)/16 Kbps (G.722.1)/16 Kbps (G.726)/32 to 160 Kbps (MP2L2)/8 to 160 Kbps (MP3)/16 to 64 Kbps (AAC-LC)
Audio Sampling Rate	-U: 8 kHz/16 kHz
Environment Noise Filtering	-U: Yes
Network	
Protocols	DNS,802.1X,HTTP,WebSockets,IPv6,WebSocket,SFTP,QoS,SSL/TLS,RTP,RTCP,UDP,IPv4, DDNS,SNMP,RTSP,UPnP,NTP,DHCP,HTTPS,IGMP,FTP,TCP/IP,ICMP
Simultaneous Live View	Up to 6 channels
API	ISAPI,EZVIZ,ONVIF,ISUP,SDK
User/Host	Up to 32 users 3 user levels: administrator, operator, and user
Security	IP address filter, security audit log, TLS 1.3, watermark, complicated password, WSSE and digest authentication for Open Network Video Interface, AES128/256, control timeout settings, Password protection, 802.1X authentication(EAP-LEAP,EAP-TLS,EAP-MD5,EAP-PEAP), HTTPS encryption, RTP/RTSP over HTTPS, basic and digest authentication for HTTP/HTTPS, TLS 1.2
Network Storage	NO
Client	iVMS-4200,Hik-Connect
Web Browser	Plug-in required live view: Chrome 91+, Firefox 88+, Edge 91+
Image	
Image Parameters Switch	Yes
Image Settings	Rotate mode,saturation,brightness,contrast,sharpness,gain,white balance,AGC,adjustable by client software or web browser
Day/Night Switch	Day,Night,Auto,Schedule
Wide Dynamic Range (WDR)	120 dB
SNR	≥ 52 dB
Image Enhancement	BLC,HLC,3D DNR
Privacy Mask	4 programmable polygon privacy masks
Interface	
Ethernet Interface	1 RJ45 10 M/100 M self-adaptive Ethernet port
On-Board Storage	NA
Built-in Microphone	Yes,1 built-in microphone
Built-in Speaker	NA
Audio	NA
Alarm	NA
Reset Key	DS-2CD1343G3-LIU(2.8mm)(海外标配),DS-2CD1343G3-LIU(4mm)(海外标配):NA DS-2CD1343G3-LIU(2.8mm)(海外中 性),DS-2CD1343G3-LIU(2.8mm)(VIE),DS-2CD1343G3-LIU(2.8mm)(Ca Branch)KIT:-F: Yes
Event	
Basic Event	Video tampering alarm, motion detection (support alarm triggering by specified target types (human, vehicle and animal)), exception
Smart Event	NO
Linkage	Notify surveillance center,send email,trigger capture -F: Audible warning /SX: Strobe Light Flashing (White/Red-Blue, configurable)

Deep Learning Function	
Perimeter Protection	NO
Face Capture	NO
General	
Power	DS-2CD1343G3-LIU(2.8mm)(Ca Branch)KIT:-LIU(F)：12 VDC ± 25%, 0.54 A, max. 6.5 W,Ø5.5 mm coaxial power plug, PoE: IEEE 802.3af, Class 3, max. 7.5 W -LIU(F)/SX：12 VDC ± 25%, 0.75 A, max. 9.0 W,Ø5.5 mm coaxial power plug, PoE: IEEE 802.3af, Class 3, max. 10.5 W DS-2CD1343G3-LIU(2.8mm)(海外标配),DS-2CD1343G3-LIU(2.8mm)(海外中性),DS-2CD1343G3-LIU(4mm)(海外标配),DS-2CD1343G3-LIU(2.8mm)(VIE):12 VDC ± 25%, 0.54 A, max. 6.5 W,Ø5.5 mm coaxial power plug, PoE: IEEE 802.3af, Class 3, max. 7.5 W
Material	Cover: PLASTIC, main body: Metal
Dimension	Ø110 mm × 93 mm (Ø4.33" × 3.66")
Package Dimension	134 mm × 134 mm × 115 mm (5.28" × 5.28" × 4.53")
Weight	Approx. 385 g (0.848 lb.)
With Package Weight	-LIU(F): Approx. 550 g (1.212 lb.)
Storage Conditions	-30 °C to 60 °C (-22 °F to 140 °F). Humidity 95% or less (non-condensing)
Startup and Operating Conditions	-30 °C to 60 °C (-22 °F to 140 °F). Humidity 95% or less (non-condensing)
Language	English, Russian, Ukrainian, Arabic, Spanish, French, Portuguese, Turkish, Polish, German
General Function	Heartbeat,mirror,password reset via email,password protection,anti-banding
Flashing Light	NA
Approval	
EMC	CE-EMC: EN 55032:2015+A1:2020, EN 50130-4:2011+A1:2014, EN IEC 61000-3-2:2019+A1:2021, EN 61000-3-3:2013+A1:2019+A2:2021
Safety	CB: IEC 62368-1:2014+A11, CE-LVD: EN 62368-1:2014/A11:2017
Environment	CE-RoHS: 2011/65/EU, WEEE: 2012/19/EU, Reach: Regulation (EC) No 1907/2006
Protection	IP67:IEC 60529-2013

▪ Dimension

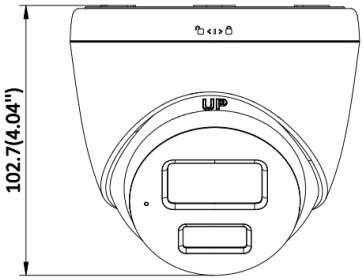

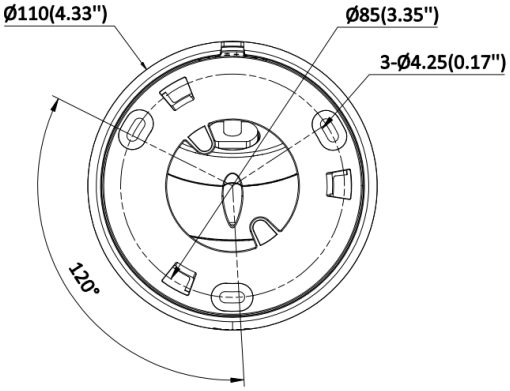

Unit:mm

▪ Accessory

▪ Optional

DS-1476ZJ-SUS	DS-1275ZJ-SUS	DS-1275ZJ-S-SUS	DS-1276ZJ-SUS	DS-220AZJ-145-WA
DS-1272ZJ-110-TRS	**DS-220AZJ-130-WA**	**DS-1475ZJ-SUS**	**DS-1281ZJ-S**	**DS-1280ZJ-TR13**
	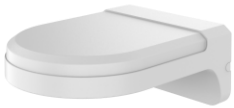			
DS-1280ZJ-S	**DS-1271ZJ-110-TRS**			

▪ Installation Methods

Corner Mounting DS-1476ZJ-SUS+DS-220AZJ-145-WA	Corner Mounting DS-1276ZJ-SUS+DS-1280ZJ-S	Vertical Pole Mounting DS-1275ZJ-SUS+DS-1280ZJ-S	Vertical Pole Mounting DS-1275ZJ-S-SUS+DS-220AZJ-145-WA	Vertical Pole Mounting DS-1475ZJ-SUS+DS-220AZJ-130-WA
	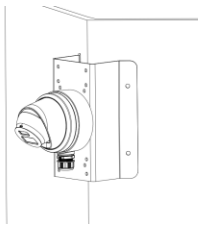	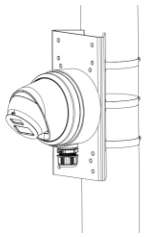		
Wall Mounting DS-220AZJ-145-WA	**Wall Mounting DS-1272ZJ-110-TRS+DS-1253ZJ-M**	**Wall Mounting DS-220AZJ-130-WA**	**Inclined Ceiling Mounting DS-1281ZJ-S**	**Junction Box DS-1280ZJ-TR13**
	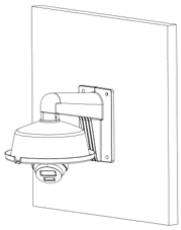			
Junction Box DS-1280ZJ-S	**Pendant Mounting DS-1271ZJ-110-TRS**			

See Far, Go Further

www.hikvision.com
support@hikvision.com

© Hangzhou Hikvision Digital Technology Co., Ltd. Unless otherwise agreed, Hikvision makes no warranties, express or implied. We reserve the right to introduce modifications without notice.