HIKVISION

DS-2CD1323G3-LIUF
2 MP Smart Hybrid Light 3.0 Fixed Turret Network Camera

- Enhanced Image Quality: delivers better imaging performance
- Motion Detection 3.0: focuses on person and vehicle classification based on deep learning
- Smart Hybrid Light: integrates IR and white lights, 3 supplemental lighting modes
- Built-in microphone for real-time audio security
- -F: Support on-board storage up to 512 GB (SD card slot)
- Dust and water resistant (IP67)

▪ Specification

Camera	
Image Sensor	1/2.9" Progressive Scan CMOS
Max. Resolution	1920 × 1080
Min. Illumination	Color: 0.003 Lux @ (F1.6, AGC ON),B/W: 0 Lux with IR
Shutter Time	1 s to 1/100,000 s
Day & Night	IR cut filter
Angle Adjustment	Pan: 0° to 360°,tilt: 0° to 75°,rotate: 0° to 360°
Lens	
Lens Type	Fixed focal lens, 2.8 and 4 mm optional
Focal Length & FOV	2.8 mm, Horizontal FOV:103°, Vertical FOV:56°, Diagonal FOV:121° 4 mm, Horizontal FOV:82°, Vertical FOV:45°, Diagonal FOV:95°
Lens Mount	M12
Focus	NA
Iris Type	Fixed
Aperture	F1.6
Depth of Field	2.8 mm: 1 m to ∞ 4 mm: 1.2 m to ∞
Pixel Density	
O2DCPVS	2.8 mm: Overview: 54.6 m, Outline: 27.3 m, Discern: 13.7 m, Perceive: 8.7 m, Characterize: 4.4 m, Validate: 2.2 m, Scrutinize: 0.7 m 4 mm: Overview: 76.3 m, Outline: 38.1 m, Discern: 19.1 m, Perceive: 12.2 m, Characterize: 6.1 m, Validate: 3.1 m, Scrutinize: 1 m
Illuminator	
Supplement Light Type	IR,White Light
Supplement Light Range	Up to 30 m
Smart Supplement Light	Yes
IR Wavelength	850 nm
Video	
Main Stream	50 Hz: 25 fps (1920 × 1080, 1280 × 720) 60 Hz: 30 fps (1920 × 1080, 1280 × 720)
Sub-Stream	50 Hz: 25 fps (640 × 480, 640 × 360) 60 Hz: 30 fps (640 × 480, 640 × 360)
Third Stream	NA
Video Compression	Main stream: H.265+/H.265/H.264+/H.264 Sub-stream: H.265/H.264/MJPEG
Video Bit Rate	32 Kbps to 8 Mbps
H.264 Type	Baseline Profile,Main Profile,High Profile
H.265 Type	Main Profile
Bit Rate Control	CBR,VBR
Scalable Video Coding (SVC)	YES
Region of Interest (ROI)	1 fixed regions for each stream
Target Cropping	NO
Audio	
Audio Type	Mono sound
Audio Compression	-U: G.711/G.722.1/G.726/MP2L2/PCM/MP3/AAC-LC

Audio Bit Rate	-U: 64 Kbps (G.711ulaw/G.711alaw)/16 Kbps (G.722.1)/16 Kbps (G.726)/32 to 160 Kbps (MP2L2)/16 to 64 Kbps (AAC-LC)
Audio Sampling Rate	-U: 8 kHz/16 kHz
Environment Noise Filtering	-U: Yes
Network	
Protocols	DNS,802.1X,HTTP,WebSockets,IPv6,WebSocket,SFTP,QoS,SSL/TLS,RTP,RTCP,UDP,IPv4, DDNS,SNMP,RTSP,UPnP,NTP,DHCP,HTTPS,IGMP,FTP,TCP/IP,ICMP
Simultaneous Live View	Up to 6 channels
API	ISAPI,EZVIZ,ONVIF,ISUP,SDK
User/Host	Up to 32 users 3 user levels: administrator, operator, and user
Security	IP address filter, security audit log, TLS 1.3, watermark, complicated password, WSSE and digest authentication for Open Network Video Interface, AES128/256, control timeout settings, Password protection, 802.1X authentication(EAP-LEAP,EAP-TLS,EAP-MD5,EAP-PEAP), HTTPS encryption, RTP/RTSP over HTTPS, basic and digest authentication for HTTP/HTTPS, TLS 1.2
Network Storage	NO
Client	iVMS-4200,Hik-Connect
Web Browser	Plug-in required live view: Chrome 91+, Firefox 88+, Edge 91+
Image	
Image Parameters Switch	Yes
Image Settings	Rotate mode,saturation,brightness,contrast,sharpness,gain,white balance,AGC,adjustable by client software or web browser
Day/Night Switch	Day,Night,Auto,Schedule
Wide Dynamic Range (WDR)	Digital WDR
SNR	≥ 52 dB
Image Enhancement	BLC,HLC,3D DNR
Privacy Mask	4 programmable polygon privacy masks
Interface	
Ethernet Interface	1 RJ45 10 M/100 M self-adaptive Ethernet port
On-Board Storage	Built-in memory card slot, support microSD/microSDHC/microSDXC card, up to 512 GB
Built-in Microphone	Yes,1 built-in microphone
Built-in Speaker	NA
Audio	NA
Alarm	NA
Reset Key	DS-2CD1323G3-LIUF(2.8mm)(海外中性):-F: Yes DS-2CD1323G3-LIUF(2.8mm)(海外标配),DS-2CD1323G3-LIUF(4mm)(海外标配):Yes
Event	
Basic Event	Video tampering alarm, motion detection (support alarm triggering by specified target types (human, vehicle and animal)), exception
Smart Event	NO
Linkage	Notify surveillance center,send email,trigger capture -F: Audible warning /SX: Strobe Light Flashing (White/Red-Blue, configurable)

Deep Learning Function	
Perimeter Protection	NO
Face Capture	NO
General	
Power	12 VDC ± 25%, 0.5 A, max. 6.0 W,Ø5.5 mm coaxial power plug, PoE: IEEE 802.3af, Class 3, max. 7.0 W
Material	Cover: PLASTIC, main body: Metal
Dimension	Ø110 mm × 93 mm (Ø4.33" × 3.66")
Package Dimension	134 mm × 134 mm × 115 mm (5.28" × 5.28" × 4.53")
Weight	Approx. 385 g (0.848 lb.)
With Package Weight	-LIU(F): Approx. 550 g (1.212 lb.)
Storage Conditions	-30 °C to 60 °C (-22 °F to 140 °F). Humidity 95% or less (non-condensing)
Startup and Operating Conditions	-30 °C to 60 °C (-22 °F to 140 °F). Humidity 95% or less (non-condensing)
Language	English, Russian, Ukrainian, Arabic, Spanish, French, Portuguese, Turkish, Polish, German
General Function	Heartbeat,mirror,password reset via email,password protection,anti-banding
Flashing Light	NA
Approval	
EMC	CE-EMC: EN 55032:2015+A1:2020, EN 50130-4:2011+A1:2014, EN IEC 61000-3-2:2019+A1:2021, EN 61000-3-3:2013+A1:2019+A2:2021
Safety	CB: IEC 62368-1:2014+A11, CE-LVD: EN 62368-1:2014/A11:2017
Environment	CE-RoHS: 2011/65/EU, WEEE: 2012/19/EU, Reach: Regulation (EC) No 1907/2006
Protection	IP67:IEC 60529-2013

▪ Dimension

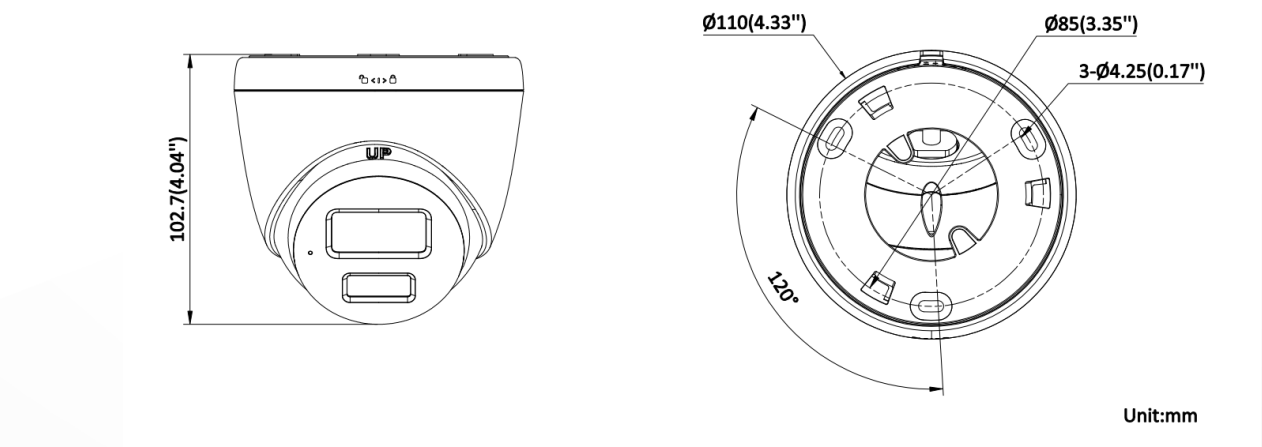

▪ Accessory

▪ Optional

DS-1476ZJ-SUS	DS-1475ZJ-SUS	DS-1276ZJ-SUS	DS-1275ZJ-SUS	DS-1275ZJ-S-SUS
DS-220AZJ-145-WA	**DS-1272ZJ-110-TRS**	**DS-1271ZJ-110-TRS**	**DS-220AZJ-130-WA**	**DS-1280ZJ-S**
DS-1280ZJ-TR13	**DS-1281ZJ-S**			

▪ Installation Methods

Corner Mounting DS-1476ZJ-SUS+DS-220AZJ-130-WA	Corner Mounting DS-1276ZJ-SUS+DS-1280ZJ-TR13_V100R001C001	Vertical Pole Mounting DS-1475ZJ-SUS+DS-220AZJ-130-WA	Vertical Pole Mounting DS-1275ZJ-SUS+DS-1281ZJ-S	Vertical Pole Mounting DS-1275ZJ-S-SUS+DS-220AZJ-130-WA
	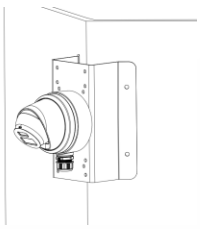		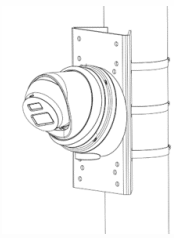	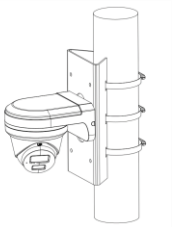
Wall Mounting DS-220AZJ-145-WA	**Wall Mounting DS-1272ZJ-110-TRS+DS-1253ZJ-M**	**Wall Mounting DS-220AZJ-130-WA**	**Pendant Mounting DS-1271ZJ-110-TRS**	**Junction Box DS-1280ZJ-S**

	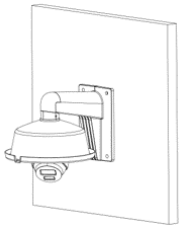			
Junction Box **DS-1280ZJ-TR13**	**Inclined Ceiling Mounting** **DS-1281ZJ-S**			
	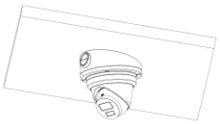			

See Far, Go Further

www.hikvision.com
support@hikvision.com

© Hangzhou Hikvision Digital Technology Co., Ltd. Unless otherwise agreed, Hikvision makes no warranties, express or implied. We reserve the right to introduce modifications without notice.