DS-2CD3346G3-LISU/SL

4 MP AcuSense Strobe Light and Audible Warning Fixed Turret Network Camera

Hikvision has been dedicated to develop products with security since established. Hikvision always follows security by design principle and has adopted many methods of security technologies into our product development lifecycle, including terminal security, data security, application security, network security, and privacy protection. In the meantime, the security technologies used by Hikvision are all in compliance with local applicable laws and safety regulations. These security measures could enhance product's cyber security protection capability and protect your devices as well as your data from malicious cyber attacks.

Hikvision ColorVu technology provides 24/7 vivid colorful images with F1.0 advanced lenses, high performance sensors and friendly lighting. F1.0 super-aperture collects more light to produce brighter images. Advanced sensor technology can vastly improve the utilization of available light.

- HIK AI-ISP for excellent noise reduction effect
- 24/7 colorful imaging via Darkfighter 2.0 technology
- Scene-adaptive WDR
- Focus on Person and Vehicle classification based on deep learning
- Built-in arrayed dual-microphone for real-time high quality audio security
- Provide real-time security via built-in two-way audio
- -Y: Anti-corrosion design, providing reliability and longevity compared to standard (NEMA4X)
- Smart Hybrid Light: Integrates IR and White lights, 3 supplemental lighting modes
- Water and dust resistant (IP67)
- Audio and alarm interface available
- Active strobe light and audio alarm to warn intruders off

▪ Specification

Model		DS-2CD3346G3-LISU/SL
Camera	Image Sensor	1/1.8" Progressive Scan CMOS
	Max. Resolution	2688 × 1520
	Min. Illumination	Color: 0.0001 Lux @ (F1.0, AGC ON),0 Lux with light
	Shutter Time	1 s to 1/100,000 s
	Day & Night	IR cut filter
	Angle Adjustment	Pan: 0° to 360°,tilt: 0° to 75°,rotate: 0° to 360°
Lens	Lens Type	Fixed focal lens, 2.8 and 4 mm optional
	Focal Length & FOV	2.8 mm, horizontal FOV 111.1°, vertical FOV 57.6°, diagonal FOV 138.5° 4 mm, horizontal FOV 95.2°, vertical FOV 48.3°, diagonal FOV 117.4°
	Lens Mount	M16
	Iris Type	Fixed
	Aperture	F1.0
	Depth of Field	2.8 mm: 2.5 m to ∞ 4 mm: 3.1 m to ∞
DORI	DORI	2.8 mm: D: 61 m, O: 24 m, R: 12 m, I: 6 m 4 mm: D: 75 m, O: 30 m, R: 15 m, I: 7 m
Illuminator	Supplement Light Type	IR,White Light
	Supplement Light Range	Up to 40 m
	Smart Supplement Light	Yes
	IR Wavelength	850 nm
HEOP	Open Resources	Memory: 60 MB, Smart RAM: 450 MB, eMMC: 2 GB
	Computing Power	1.5 TOPS
	Open Capability	HEOP 2.0 OpendevSDK
	Deep Learning Structure	Caffe,PyTorch,TensorFlow,PaddlePaddle,ONNX
	Programming Language	C,C++
Video	Main Stream	50 Hz: 25 fps (2688 × 1520) 60 Hz: 30 fps (2688 × 1520) 50 Hz: 50 fps (1920 × 1080, 1280 × 720) 60 Hz: 60 fps (1920 × 1080, 1280 × 720)

	Sub-Stream	50 Hz: 25 fps (1280 × 720, 640 × 480, 640 × 360) 60 Hz: 30 fps (1280 × 720, 640 × 480, 640 × 360)
	Third Stream	50 Hz: 10 fps (1920 × 1080, 1280 × 720, 640 × 480, 640 × 360) 60 Hz: 10 fps (1920 × 1080, 1280 × 720, 640 × 480, 640 × 360) *Third stream is supported under certain settings.
	Fourth Stream	50 Hz: 10 fps (1280 × 720, 640 × 480, 640 × 360) 60 Hz: 10 fps (1280 × 720, 640 × 480, 640 × 360) *Fourth stream is supported under certain settings.
	Video Compression	Main stream: H.265/H.264/H.264+/H.265+, Sub-stream: H.265/H.264/MJPEG, Third stream: H.265/H.264, Fourth stream: H.265/H.264/MJPEG,
	Video Bit Rate	32 Kbps to 8 Mbps
	H.264 Type	Baseline Profile,Main Profile,High Profile
	H.265 Type	Main Profile
	Bit Rate Control	CBR,VBR
	Scalable Video Coding (SVC)	H.264 and H.265 encoding
	Region of Interest (ROI)	5 fixed regions for main stream and sub-stream
	e-PTZ	Support Patrol and Auto Tracking settings
Audio	Audio Type	Mono sound
	Audio Compression	G.711/G.722.1/G.726/MP2L2/PCM/MP3/AAC-LC
	Audio Bit Rate	64 Kbps (G.711ulaw/G.711alaw)/16 Kbps (G.722.1)/16 Kbps (G.726)/32 to 192 Kbps (MP2L2)/8 to 320 Kbps (MP3)/16 to 64 Kbps (AAC-LC)
	Audio Sampling Rate	8 kHz/16 kHz/32 kHz/48 kHz
	Environment Noise Filtering	Yes
Network	Protocols	TCP/IP, ICMP, HTTP, HTTPS, FTP, DHCP, DNS, DDNS, RTP, RTSP, RTCP, NTP, UPnP, SMTP, IGMP, 802.1X, QoS, IPv4, IPv6, UDP, Bonjour, SSL/TLS, PPPoE, SNMP, WebSocket, WebSockets, SRTP, SFTP
	Simultaneous Live View	Up to 6 channels
	API	ONVIF (Profile S, Profile T, Profile G),ISAPI,SDK,ISUP
	User/Host	Up to 32 users 3 user levels: administrator, operator, and user
	Security	Password protection, complicated password, HTTPS encryption, 802.1X authentication (EAP-TLS, EAP-LEAP, EAP-MD5), watermark, IP address filter, basic and digest authentication for HTTP/HTTPS, WSSE and digest authentication for Open Network Video Interface, RTP/RTSP over HTTPS, control timeout settings, security audit log, TLS 1.1/1.2/1.3, host authentication (MAC address)
	Network Storage	NAS (NFS, SMB/CIFS),Auto Network Replenishment (ANR)

	Client	iVMS-4200,Hik-Connect,Hik-Central
	Web Browser	Plug-in free live view: Chrome 91+, Firefox 88+, Edge 91+, Safari 13+ Local service: Chrome 91+, Firefox 88+, Edge 91+
Image	Image Parameters Switch	Yes
	Image Settings	Rotate mode,saturation,brightness,contrast,sharpness,gain,white balance,adjustable by client software or web browser
	Day/Night Switch	Day,Night,Auto,Schedule
	Image Enhancement	BLC,HLC,3D DNR,Distortion Correction,Defog
	SNR	≥ 52 dB
	Wide Dynamic Range (WDR)	130 dB
	Image Stabilization	EIS
	Privacy Mask	8 programmable polygon privacy masks
Interface	Ethernet Interface	1 RJ45 10 M/100 M self-adaptive Ethernet port
	On-Board Storage	Built-in memory card slot, support microSD/microSDHC/microSDXC card, up to 512 GB
	Built-in Speaker	Max. power consumption: 2 W, max. sound pressure level: 10 cm: 110 dB.
	Audio	Built-in Microphone: Arrayed dual-microphone, 1 input (line in), two-core terminal block, max. input amplitude: 3.3 Vpp, input impedance: 4.7 KΩ, interface type: non-equilibrium, 1 output (line out), two-core terminal block, max. output amplitude: 3.3 Vpp, output impedance: 100 Ω, interface type: non-equilibrium
	Alarm	1 input, 1 output (max. 24 VDC/24 VAC, 1 A)
	Reset Key	Yes
	Power Output	12 VDC, max. 100 mA
Event	Basic Event	Motion detection (support alarm triggering by specified target types (human and vehicle)),video tampering alarm,exception
	Smart Event	Scene change detection, audio exception detection, defocus detection
	Linkage	Upload to FTP/NAS/memory card,notify surveillance center,send email,trigger alarm output,trigger recording,trigger capture,audible warning,strobe light
Deep Learning Function	Face Capture	Yes
	People Counting	Yes
	Perimeter Protection	Line crossing, intrusion, region entrance, region exiting Support alarm triggering by specified target types (human and vehicle)
General	Power	12 VDC ± 25%, 1.29 A, max. 15.5 W,Ø5.5 mm coaxial power plug,reverse polarity protection, PoE: IEEE 802.3at, Class 4, max. 17 W
	Material	Cover: Metal, main body: Metal

	Dimension	Ø138.3 mm × 115.4 mm (Ø5.4" × 4.5")
	Package Dimension	170 mm × 170 mm × 160 mm (6.7" × 6.7" × 6.3")
	Weight	Approx. 825 g (1.8 lb.)
	With Package Weight	Approx. 1190 g (2.9 lb.)
	Storage Conditions	-30 °C to 60 °C (-22 °F to 140 °F). Humidity 95% or less (non-condensing)
	Startup and Operating Conditions	-30 °C to 60 °C (-22 °F to 140 °F). Humidity 95% or less (non-condensing)
	General Function	Heartbeat,mirror,flash log,password reset via email,pixel counter,anti-banding
	Language	33 languages: English, Russian, Estonian, Bulgarian, Hungarian, Greek, German, Italian, Czech, Slovak, French, Polish, Dutch, Portuguese, Spanish, Romanian, Danish, Swedish, Norwegian, Finnish, Croatian, Slovenian, Serbian, Turkish, Korean, Traditional Chinese, Thai, Vietnamese, Japanese, Latvian, Lithuanian, Portuguese (Brazil), Ukrainian
	Flashing Light	White Light
Approval	EMC	CE-EMC: EN 55032:2015+A1:2020, EN 50130-4:2011+A1:2014, EN IEC 61000-3-2:2019+A1:2021, EN 61000-3-3:2013+A1:2019+A2:2021, RCM: AS/NZS CISPR 32: 2015, IC: ICES-003: Issue 7, KC: KN32: 2015, KN35: 2015
	Safety	CB: IEC 62368-1: 2014+A11, CE-LVD: EN 62368-1: 2014/A11: 2017
	Environment	CE-RoHS: 2011/65/EU
	Protection	IP67: IEC 60529-2013
	Anti-Corrosion Protection	-Y: NEMA 4X (NEMA 250-2018)

▪ Typical Application

Hikvision products are classified into three levels according to their anti-corrosion performance. Refer to the following description to choose for your using environment.

This model has MODERATE PROTECTION.

Level	Description
Top-level protection	Hikvision products at this level are equipped for use in areas where professional anti-corrosion protection is a must. Typical application scenarios include coastlines, docks, chemical plants, and more.
Moderate protection	Hikvision products at this level are equipped for use in areas with moderate anti-corrosion demands. Typical application scenarios include coastal areas about 2 kilometers (1.24 miles) away from coastlines, as well as areas affected by acid rain.

No specific protection	Hikvision products at this level are equipped for use in areas where no specific anti-corrosion protection is needed.

▪ Available Model

DS-2CD3346G3-LISU/SL(2.8mm)

DS-2CD3346G3-LISU/SL(4mm)

▪ Dimension

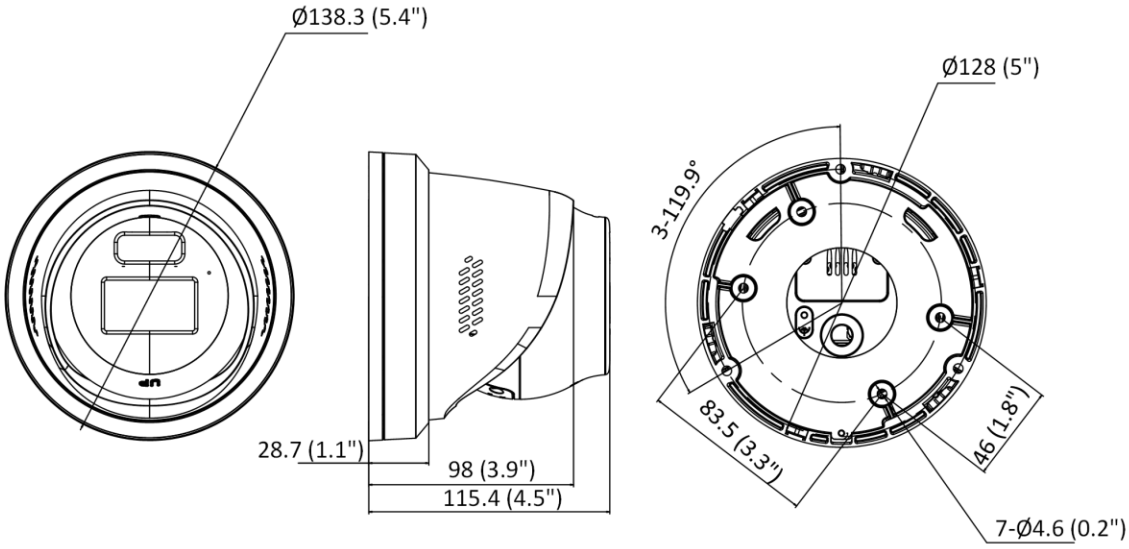

Unit: mm (inch)

▪ Accessory

▪ Optional

DS-220AZJ-145-WA Wall mount	DS-1276ZJ-SUS Corner mount	DS-1275ZJ-S-SUS Vertical pole mount	DS-1275ZJ-SUS Vertical pole mount	DS-1271ZJ-140 Pendant Mount
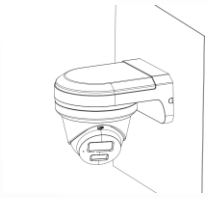	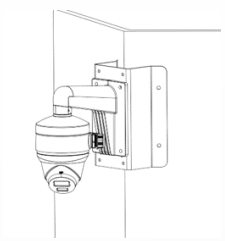	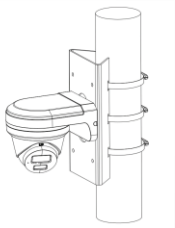	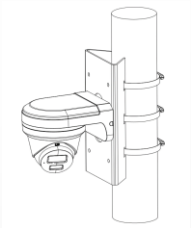	
DS-1273ZJ-140 Wall mount	DS-1280ZJ-PT6 Junction box	DS-1273ZJ-140B Wall mount		

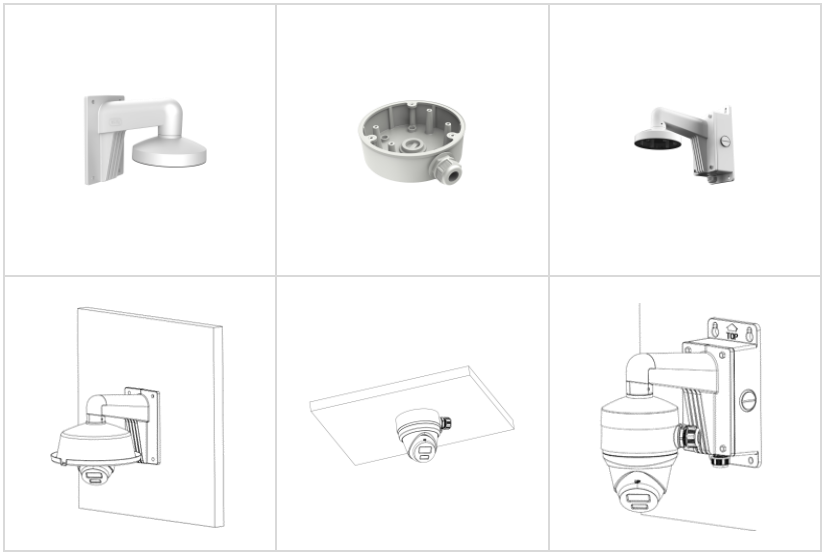

See Far, Go Further

www.hikvision.com
support@hikvision.com

© Hangzhou Hikvision Digital Technology Co., Ltd. Unless otherwise agreed, Hikvision makes no warranties, express or implied. We reserve the right to introduce modifications without notice.