HIKVISION

# DS-2CD3387G3-LISU
## 8 MP Dual Illumination Fixed Turret Network Camera

ColorVu 3.0

AcuSense 3.0

Hikvision has been dedicated to develop products with security since established. Hikvision always follows security by design principle and has adopted many methods of security technologies into our product development lifecycle, including terminal security, data security, application security, network security, and privacy protection. In the meantime, the security technologies used by Hikvision are all in compliance with local applicable laws and safety regulations. These security measures could enhance product's cyber security protection capability and protect your devices as well as your data from malicious cyber attacks.
Hikvision Darkfighter 2.0 technology provides 24/7 vivid colorful images with F1.0 advanced lenses, high performance sensors and friendly lighting. F1.0 super-aperture collects more light to produce brighter images. Advanced sensor technology can vastly improve the utilization of available light.

- HIK AI-ISP for excellent noise reduction effect
- 24/7 colorful imaging via ColorVu technology
- 130 dB WDR, support Auto mode, clear imaging against strong back light
- Smart Hybrid Light: Integrates IR and White lights, 3 supplemental lighting modes
- AcuSense: Focus on person and vehicle classification based on deep learning
- Built-in arrayed dual-microphone for real-time high quality audio security
- Water and dust resistant (IP67)
- -Y: Anti-corrosion design, providing reliability and longevity compared to standard (NEMA 4X)

## ▪ Specification

| | |
|---|---|
| **Camera** | |
| Image Sensor | 1/1.8" Progressive Scan CMOS |
| Max. Resolution | 3840 × 2160 |
| Min. Illumination | Color: 0.0005 Lux @ (F1.0, AGC ON),0 Lux with light |
| Shutter Time | 1 s to 1/100,000 s |
| Day & Night | IR cut filter |
| Angle Adjustment | Pan: 0° to 360°,tilt: 0° to 75°,rotate: 0° to 360° |
| **Lens** | |
| Lens Type | Fixed focal lens, 2.8 and 4 mm optional |
| Focal Length & FOV | 2.8 mm, horizontal FOV 108.8°, vertical FOV 56.4°, diagonal FOV 134.3°<br>4 mm, horizontal FOV 93.3°, vertical FOV 47.2°, diagonal FOV 114.2° |
| Lens Mount | M16 |
| Iris Type | Fixed |
| Aperture | F1.0 |
| Depth of Field | 2.8 mm: 3.3 m to ∞<br>4 mm: 3.8 m to ∞ |
| **DORI** | |
| DORI | 2.8 mm: D: 89 m, O: 35 m, R: 17 m, I: 8 m<br>4 mm: D: 109 m, O: 43 m, R: 21 m, I: 10 m |
| **Illuminator** | |
| Supplement Light Type | IR,White Light |
| Supplement Light Range | Up to 40 m |
| Smart Supplement Light | Yes |
| IR Wavelength | 850 nm |
| **HEOP** | |
| Open Resources | Memory: 40 MB,<br>Smart RAM: 450 MB,<br>eMMC: 2 GB |
| Computing Power | 1.5 TOPS |
| Open Capability | HEOP 2.0 OpendevSDK |
| Deep Learning Structure | Caffe,PyTorch,TensorFlow,PaddlePaddle,ONNX |
| Programming Language | C,C++ |
| **Video** | |
| Main Stream | 50 Hz:<br>25 fps (3840 × 2160, 3200 × 1800, 2688 × 1520, 1920 × 1080, 1280 × 720)<br>60 Hz:<br>30 fps (3840 × 2160, 3200 × 1800, 2688 × 1520, 1920 × 1080, 1280 × 720) |
| Sub-Stream | 50 Hz: 25 fps (1280 × 720, 640 × 480, 640 × 360)<br>60 Hz: 30 fps (1280 × 720, 640 × 480, 640 × 360) |
| Third Stream | 50 Hz: 10 fps (1280 × 720, 640 × 480, 640 × 360)<br>60 Hz: 10 fps (1280 × 720, 640 × 480, 640 × 360) |
| Fourth Stream | 50 Hz: 1 fps (1280 × 720, 640 × 480, 640 × 360)<br>60 Hz: 1 fps (1280 × 720, 640 × 480, 640 × 360) |

| | |
|---|---|
| Video Compression | Main stream: H.265/H.264/H.264+/H.265+,<br>Sub-stream: H.265/H.264/MJPEG,<br>Third stream: H.265/H.264,<br>Fourth stream: H.265/H.264/MJPEG, |
| Video Bit Rate | 32 Kbps to 16 Mbps |
| H.264 Type | Baseline Profile,Main Profile,High Profile |
| H.265 Type | Main Profile |
| Bit Rate Control | CBR,VBR |
| Scalable Video Coding (SVC) | H.264 and H.265 encoding |
| Region of Interest (ROI) | 5 fixed regions for main stream and sub-stream |
| e-PTZ | Support Patrol and Auto Tracking settings |
| AI Encoding | NA |
| **Audio** | |
| Audio Type | Mono sound |
| Audio Bit Rate | 64 Kbps (G.711ulaw/G.711alaw)/16 Kbps (G.722.1)/16 Kbps (G.726)/32 to 192 Kbps (MP2L2)/8 to 320 Kbps (MP3)/16 to 64 Kbps (AAC-LC) |
| Audio Compression | G.711/G.722.1/G.726/MP2L2/PCM/MP3/AAC-LC |
| Environment Noise Filtering | Yes |
| Audio Sampling Rate | 8 kHz/16 kHz/32 kHz/48 kHz |
| **Network** | |
| Protocols | TCP/IP, ICMP, HTTP, HTTPS, FTP, DHCP, DNS, DDNS, RTP, RTSP, RTCP, NTP, UPnP, SMTP, IGMP, 802.1X, QoS, IPv4, IPv6, UDP, Bonjour, SSL/TLS, PPPoE, SNMP, WebSocket, WebSockets, SRTP, SFTP |
| Simultaneous Live View | Up to 6 channels |
| API | ISAPI,SDK,ISUP,ONVIF (Profile S, Profile T, Profile G, Profile M) |
| User/Host | Up to 32 users<br>3 user levels: administrator, operator, and user |
| Security | Password protection, complicated password, HTTPS encryption, 802.1X authentication (EAP-TLS, EAP-LEAP, EAP-MD5), watermark, IP address filter, basic and digest authentication for HTTP/HTTPS, WSSE and digest authentication for Open Network Video Interface, RTP/RTSP over HTTPS, control timeout settings, security audit log, TLS 1.1/1.2/1.3, host authentication (MAC address) |
| Network Storage | NAS (NFS, SMB/CIFS),Auto Network Replenishment (ANR) |
| Client | iVMS-4200,Hik-Connect,Hik-Central |
| Web Browser | Plug-in free live view: Chrome 91+, Firefox 88+, Edge 91+, Safari 13+<br>Local service: Chrome 91+, Firefox 88+, Edge 91+ |
| **Image** | |
| Image Parameters Switch | Yes |
| Image Settings | Rotate mode,saturation,brightness,contrast,sharpness,gain,white balance,adjustable by client software or web browser |
| Day/Night Switch | Day,Night,Auto,Schedule |
| Image Enhancement | BLC,HLC,3D DNR,Distortion Correction,Defog |
| SNR | ≥ 52 dB |
| Wide Dynamic Range (WDR) | 130 dB |
| Image Stabilization | EIS |
| Privacy Mask | 8 programmable polygon privacy masks |

| | |
|---|---|
| **Interface** | |
| Ethernet Interface | 1 RJ45 10 M/100 M self-adaptive Ethernet port |
| On-Board Storage | Built-in memory card slot, support microSD/microSDHC/microSDXC card, up to 512 GB |
| Audio | Built-in Microphone: Arrayed dual-microphone,<br>1 input (line in), two-core terminal block, max. input amplitude: 3.3 Vpp, input impedance: 4.7 KΩ, interface type: non-equilibrium,<br>1 output (line out), two-core terminal block, max. output amplitude: 3.3 Vpp, output impedance: 100 Ω, interface type: non-equilibrium |
| Reset Key | Yes |
| Power Output | 12 VDC, max. 100 mA |
| **Event** | |
| Basic Event | Motion detection (support alarm triggering by specified target types (human and vehicle)),video tampering alarm,exception |
| Smart Event | Scene change detection, audio exception detection, defocus detection |
| Linkage | Upload to FTP/NAS/memory card,notify surveillance center,trigger recording,trigger capture,send email,audible warning |
| **Deep Learning Function** | |
| Face Capture | Yes |
| People Counting | Yes |
| Perimeter Protection | Line crossing, intrusion, region entrance, region exiting<br>Support alarm triggering by specified target types (human and vehicle) |
| **General** | |
| Power | 12 VDC ± 25%, 0.7 A, max. 8.5 W,Ø5.5 mm coaxial power plug,reverse polarity protection,<br>PoE: IEEE 802.3af, Class 3, max. 11 W |
| Material | Cover: Metal, main body: Metal |
| Dimension | Ø138.3 mm × 115.4 mm (Ø5.4" × 4.5") |
| Package Dimension | 170 mm × 170 mm × 160 mm (6.7" × 6.7" × 6.3") |
| Weight | Approx. 800 g (1.7 lb.) |
| With Package Weight | Approx. 1160 g (2.3 lb.) |
| Storage Conditions | -30 °C to 60 °C (-22 °F to 140 °F). Humidity 95% or less (non-condensing) |
| Startup and Operating Conditions | -30 °C to 60 °C (-22 °F to 140 °F). Humidity 95% or less (non-condensing) |
| General Function | Heartbeat,mirror,flash log,password reset via email,pixel counter,anti-banding |
| Language | 33 languages: English, Russian, Estonian, Bulgarian, Hungarian, Greek, German, Italian, Czech, Slovak, French, Polish, Dutch, Portuguese, Spanish, Romanian, Danish, Swedish, Norwegian, Finnish, Croatian, Slovenian, Serbian, Turkish, Korean, Traditional Chinese, Thai, Vietnamese, Japanese, Latvian, Lithuanian, Portuguese (Brazil), Ukrainian |
| **Approval** | |
| EMC | CE-EMC: EN 55032:2015+A1:2020, EN 50130-4:2011+A1:2014, EN IEC 61000-3-2:2019+A1:2021, EN 61000-3-3:2013+A1:2019+A2:2021,<br>RCM: AS/NZS CISPR 32: 2015,<br>IC: ICES-003: Issue 7,<br>KC: KN32: 2015, KN35: 2015 |
| Safety | CB: IEC 62368-1: 2014+A11,<br>CE-LVD: EN 62368-1: 2014/A11: 2017 |

| | |
|---|---|
| Environment | CE-RoHS: 2011/65/EU |
| Protection | IP67: IEC 60529-2013 |
| Anti-Corrosion Protection | -Y: NEMA 4X (NEMA 250-2018) |

## ▪ Typical Application

Hikvision products are classified into three levels according to their anti-corrosion performance. Refer to the following description to choose for your using environment.

This model has MODERATE PROTECTION.

| Level | Description |
|---|---|
| Top-level protection | Hikvision products at this level are equipped for use in areas where professional anti-corrosion protection is a must. Typical application scenarios include coastlines, docks, chemical plants, and more. |
| Moderate protection | Hikvision products at this level are equipped for use in areas with moderate anti-corrosion demands. Typical application scenarios include coastal areas about 2 kilometers (1.24 miles) away from coastlines, as well as areas affected by acid rain. |
| No specific protection | Hikvision products at this level are equipped for use in areas where no specific anti-corrosion protection is needed. |

## ▪ Dimension

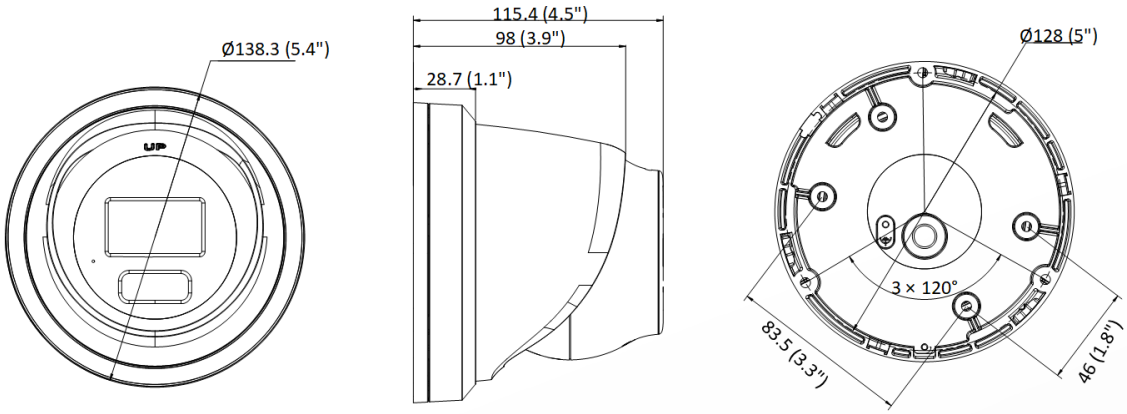


Unit: mm (inch)

## ▪ Accessory

### ▪ Optional

| | | | | |
|---|---|---|---|---|
| DS-1273ZJ-140B | DS-1271ZJ-140 | DS-220AZJ-145-WA | DS-1276ZJ-SUS | DS-1273ZJ-140 |

| | | | | |
|---|---|---|---|---|
| | | | | |
| **DS-1275ZJ-SUS** | **DS-1280ZJ-PT6** | **DS-1475ZJ-SUS** | **DS-1476ZJ-SUS** | **DS-1275ZJ-S-SUS** |
| | | | | |

## ▪ Installation Methods

| | | | | |
|---|---|---|---|---|
| **Wall Mounting DS-1273ZJ-140B+DS-1253ZJ-L** | **Wall Mounting DS-220AZJ-145-WA** | **Wall Mounting DS-1273ZJ-140+DS-1280ZJ-PT6** | **Pendant Mounting DS-1271ZJ-140** | **Corner Mounting DS-1276ZJ-SUS+DS-1273ZJ-140+DS-1280ZJ-PT6** |
| | | 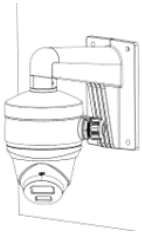 | | 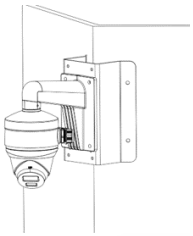 |
| **Corner Mounting DS-1476ZJ-SUS+DS-220AZJ-145-WA** | **Vertical Pole Mounting DS-1275ZJ-SUS+DS-1273ZJ-140+DS-1253ZJ-L** | **Vertical Pole Mounting DS-1475ZJ-SUS+DS-220AZJ-145-WA** | **Vertical Pole Mounting DS-1275ZJ-S-SUS+DS-220AZJ-145-WA** | **Junction Box DS-1280ZJ-PT6** |
| 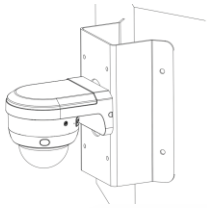 | 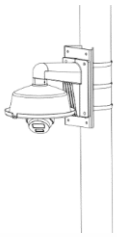 | | | |

See Far, Go Further

www.hikvision.com
support@hikvision.com

© Hangzhou Hikvision Digital Technology Co., Ltd. Unless otherwise agreed, Hikvision makes no warranties, express or implied. We reserve the right to introduce modifications without notice.