HIKVISION

DS-2CD3766G3T-IZSUY
6 MP AcuSense Varifocal Dome Network Camera

AcuSense 3.0

Hikvision has been dedicated to develop products with security since established. Hikvision always follows security by design principle and has adopted many methods of security technologies into our product development lifecycle, including terminal security, data security, application security, network security, and privacy protection. In the meantime, the security technologies used by Hikvision are all in compliance with local applicable laws and safety regulations. These security measures could enhance product's cyber security protection capability and protect your devices as well as your data from malicious cyber attacks.

- HIK AI-ISP for excellent noise reduction effect
- 130 dB WDR, support Auto mode, clear imaging against strong back light
- AcuSense: Focus on person and vehicle classification based on deep learning
- Motorized varifocal lens for easy installation and monitoring
- Built-in arrayed dual-microphone for real-time high quality audio security
- Water and dust resistant (IP67) and vandal resistant (IK10)
- -Y: Anti-corrosion design, providing reliability and longevity compared to standard (NEMA 4X)

▪ Specification

Camera	
Image Sensor	1/2.4" Progressive Scan CMOS
Max. Resolution	3200 × 1800
Min. Illumination	Color: 0.001 Lux @ (F1.2, AGC ON),B/W: 0 Lux with IR
Shutter Time	1 s to 1/100,000 s
Day & Night	IR cut filter
Angle Adjustment	Pan: 0° to 355°,tilt: 0° to 75°,rotate: 0° to 355°
Lens	
Lens Type	Varifocal lens, motorized lens, 2.7 to 13.5 mm and 7 to 35 mm optional
Focal Length & FOV	2.7 to 13.5 mm, horizontal FOV 102.3° to 36.5°, vertical FOV 53.9° to 20.6°, diagonal FOV 122.9° to 41.9° 7 to 35 mm, horizontal FOV 34.4° to 12.5°, vertical FOV 19° to 7.1°, diagonal FOV 39.8° to 14.3°
Lens Mount	2.7 to 13.5 mm：Ø14 7 to 35 mm：Integrated
Iris Type	Auto-iris
Aperture	2.7 to 13.5 mm：Max.F1.2 7 to 35 mm：Max.F1.4
Depth of Field	1 m to ∞
DORI	
DORI	2.7 to 13.5 mm： Wide: D: 78.3 m, O: 31.1 m, R: 15.7 m, I: 7.8 m Tele: D: 200.4 m, O: 79.5 m, R: 40.1 m, I: 20.0 m 7 to 35 mm： Wide: D: 218.2 m, O: 86.6 m, R: 43.6 m, I: 21.8 m Tele: D: 580.6 m, O: 230.4 m, R: 116.1 m, I: 58.1 m
Illuminator	
Supplement Light Type	IR
Supplement Light Range	2.7-13.5mm：40m；7-35mm：60m
Smart Supplement Light	Yes
IR Wavelength	850 nm
HEOP	
Open Resources	Memory: 40 MB, Smart RAM: 450 MB, eMMC: 2 GB
Computing Power	1.5 TOPS
Open Capability	HEOP 2.0 OpendevSDK
Deep Learning Structure	Caffe,PyTorch,TensorFlow,PaddlePaddle,ONNX
Programming Language	C,C++

Video	
Main Stream	50 Hz: 25 fps (3200 × 1800, 2688 × 1520, 1920 × 1080, 1280 × 720) 60 Hz: 30 fps (3200 × 1800, 2688 × 1520, 1920 × 1080, 1280 × 720)
Sub-Stream	50 Hz: 25 fps (1280 × 720, 640 × 480, 640 × 360) 60 Hz: 30 fps (1280 × 720, 640 × 480, 640 × 360)
Third Stream	50 Hz: 10 fps (1920 × 1080, 1280 × 720, 640 × 480, 640 × 360) 60 Hz: 10 fps (1920 × 1080, 1280 × 720, 640 × 480, 640 × 360)
Fourth Stream	50 Hz: 10 fps (1280 × 720, 640 × 480, 640 × 360) 60 Hz: 10 fps (1280 × 720, 640 × 480, 640 × 360)
Video Compression	Main stream: H.265/H.264/H.264+/H.265+, Sub-stream: H.265/H.264/MJPEG, Third stream: H.265/H.264, Fourth stream: H.265/H.264/MJPEG,
Video Bit Rate	32 Kbps to 16 Mbps
H.264 Type	Baseline Profile,Main Profile,High Profile
H.265 Type	Main Profile
Bit Rate Control	CBR,VBR
Scalable Video Coding (SVC)	H.264 and H.265 encoding
Region of Interest (ROI)	5 fixed regions for main stream and sub-stream
e-PTZ	Support Patrol and Auto Tracking settings
AI Encoding	NA
Audio	
Audio Type	Mono sound
Audio Compression	G.711/G.722.1/G.726/MP2L2/PCM/MP3/AAC-LC
Audio Bit Rate	64 Kbps (G.711ulaw/G.711alaw)/16 Kbps (G.722.1)/16 Kbps (G.726)/16 Kbps to 64 Kbps (AAC-LC)/32 to 192 Kbps (MP2L2)/8 to 320 Kbps (MP3)
Audio Sampling Rate	8 kHz/16 kHz/32 kHz/48 kHz
Environment Noise Filtering	Yes
Network	
Protocols	TCP/IP, ICMP, HTTP, HTTPS, FTP, DHCP, DNS, DDNS, RTP, RTSP, RTCP, NTP, UPnP, SMTP, IGMP, 802.1X, QoS, IPv4, IPv6, UDP, Bonjour, SSL/TLS, PPPoE, SNMP, WebSocket, WebSockets, SRTP, SFTP
Simultaneous Live View	Up to 6 channels
API	ISAPI,SDK,ISUP,ONVIF (Profile S, Profile T, Profile G, Profile M)
User/Host	Up to 32 users 3 user levels: administrator, operator, and user
Security	Password protection, complicated password, HTTPS encryption, 802.1X authentication (EAP-TLS, EAP-LEAP, EAP-MD5), watermark, IP address filter, basic and digest authentication for HTTP/HTTPS, WSSE and digest authentication for Open Network Video Interface, RTP/RTSP over HTTPS, control timeout settings, security audit log, TLS 1.1/1.2/1.3, host authentication (MAC address)
Network Storage	NAS (NFS, SMB/CIFS),Auto Network Replenishment (ANR)
Client	iVMS-4200,Hik-Connect,Hik-Central

Web Browser	Plug-in free live view: Chrome 91+, Firefox 88+, Edge 91+, Safari 13+ Local service: Chrome 91+, Firefox 88+, Edge 91+
Image	
Image Parameters Switch	Yes
Image Settings	Rotate mode,saturation,brightness,contrast,sharpness,gain,white balance,adjustable by client software or web browser
Day/Night Switch	Day,Night,Auto,Schedule
Image Enhancement	BLC,HLC,3D DNR,Distortion Correction,Defog
SNR	≥ 52 dB
Wide Dynamic Range (WDR)	130 dB
Image Stabilization	EIS
Privacy Mask	8 programmable polygon privacy masks
Interface	
Ethernet Interface	1 RJ45 10 M/100 M self-adaptive Ethernet port
On-Board Storage	Built-in memory card slot, support microSD/microSDHC/microSDXC card, up to 512 GB
Audio	Built-in Microphone: Arrayed dual-microphone, 1 input (line in), two-core terminal block, max. input amplitude: 3.3 Vpp, input impedance: 4.7 KΩ, interface type: non-equilibrium, 1 output (line out), two-core terminal block, max. output amplitude: 3.3 Vpp, output impedance: 100 Ω, interface type: non-equilibrium
Alarm	2 input, 2 output (max. 24 VDC/24 VAC, 1 A)
Reset Key	Yes
Power Output	12 VDC, max. 100 mA
Event	
Basic Event	Motion detection (support alarm triggering by specified target types (human and vehicle)),video tampering alarm,exception
Smart Event	Scene change detection, audio exception detection, defocus detection
Linkage	Upload to FTP/NAS/memory card,notify surveillance center,trigger recording,trigger capture,send email,audible warning
Deep Learning Function	
Face Capture	Yes
People Counting	Yes
Perimeter Protection	Line crossing, intrusion, region entrance, region exiting Support alarm triggering by specified target types (human and vehicle)
General	
Power	12 VDC ± 25%, 1.35 A, max. 16.2 W,Ø5.5 mm coaxial power plug,reverse polarity protection, PoE: IEEE 802.3at, Class 4, max. 18 W
Material	Metal
Dimension	Ø141 mm × 112 mm (Ø5.6" × 4.4")
Package Dimension	206 mm × 206 mm × 230 mm (8.1" × 8.1" × 9.1")
Weight	Approx. 850 g (1.9 lb.)
With Package Weight	Approx. 1440 g (3.2 lb.)
Storage Conditions	-30 °C to 60 °C (-22 °F to 140 °F). Humidity 95% or less (non-condensing)
Startup and Operating Conditions	-30 °C to 60 °C (-22 °F to 140 °F). Humidity 95% or less (non-condensing)

General Function	Heartbeat,mirror,flash log,password reset via email,pixel counter,anti-banding
Language	33 languages: English, Russian, Estonian, Bulgarian, Hungarian, Greek, German, Italian, Czech, Slovak, French, Polish, Dutch, Portuguese, Spanish, Romanian, Danish, Swedish, Norwegian, Finnish, Croatian, Slovenian, Serbian, Turkish, Korean, Traditional Chinese, Thai, Vietnamese, Japanese, Latvian, Lithuanian, Portuguese (Brazil), Ukrainian
Approval	
EMC	CE-EMC: EN 55032:2015+A1:2020, EN 50130-4:2011+A1:2014, EN IEC 61000-3-2:2019+A1:2021, EN 61000-3-3:2013+A1:2019+A2:2021
Safety	CB: IEC 62368-1:2014+A11, CE-LVD: EN 62368-1:2014/A11:2017
Environment	CE-RoHS: 2011/65/EU, WEEE: 2012/19/EU, Reach: Regulation (EC) No 1907/2006
Protection	IP67: IEC 60529-2013,IK10: IEC 62262:2002
Anti-Corrosion Protection	NEMA 4X (NEMA 250-2018)

▪ Typical Application

Hikvision products are classified into three levels according to their anti-corrosion performance. Refer to the following description to choose for your using environment.

This model has MODERATE PROTECTION.

Level	Description
Top-level protection	Hikvision products at this level are equipped for use in areas where professional anti-corrosion protection is a must. Typical application scenarios include coastlines, docks, chemical plants, and more.
Moderate protection	Hikvision products at this level are equipped for use in areas with moderate anti-corrosion demands. Typical application scenarios include coastal areas about 2 kilometers (1.24 miles) away from coastlines, as well as areas affected by acid rain.
No specific protection	Hikvision products at this level are equipped for use in areas where no specific anti-corrosion protection is needed.

▪ Dimension

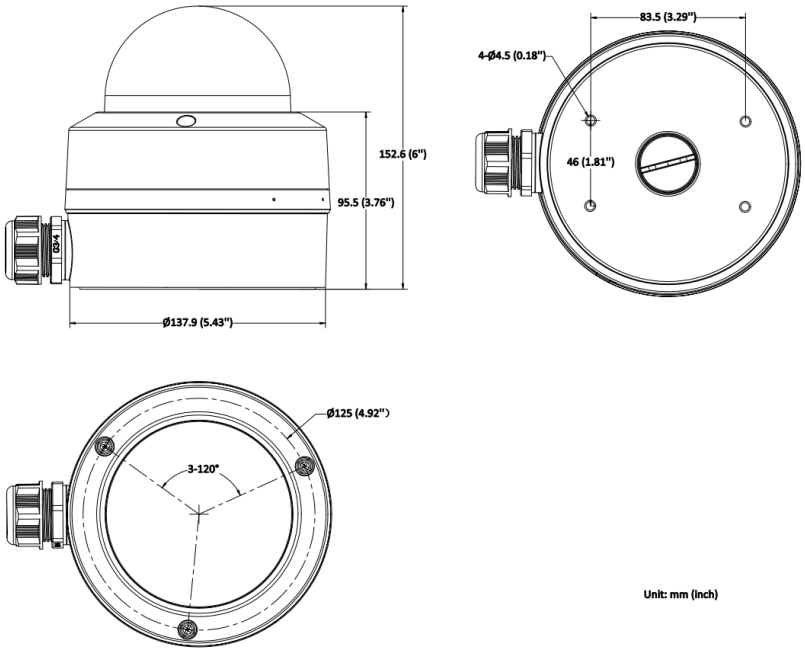

▪ Accessory

▪ Included

DS-1280ZJ-DM45-Y#EU
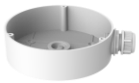

▪ Optional

DS-1271ZJ-140-DM45-Y	DS-1276ZJ-SUS	DS-1275ZJ-S-SUS	DS-1273ZJ-140-DM45-Y	DS-1275ZJ-SUS
DS-220AZJ-145-WAY	DS-1476ZJ-SUS	DS-1475ZJ-SUS		

▪ Installation Methods

Junction Box DS-1280ZJ-DM45-Y#EU	Pendant Mounting DS-1271ZJ-140-DM45-Y+	Corner Mounting DS-1276ZJ-SUS+DS-1273ZJ-140-DM45-Y	Corner Mounting DS-1476ZJ-SUS+DS-220AZJ-145-WAY	Vertical Pole Mounting DS-1275ZJ-S-SUS+DS-220AZJ-145-WAY
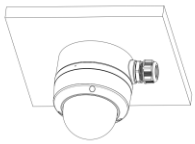		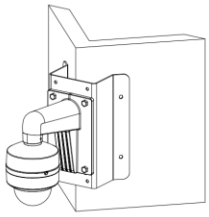	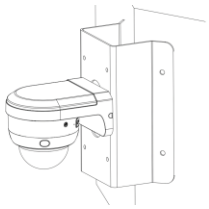	
Vertical Pole Mounting DS-1475ZJ-SUS+DS-220AZJ-145-WAY	**Wall Mounting DS-1273ZJ-140-DM45-Y+DS-1253ZJ-L**	**Wall Mounting DS-220AZJ-145-WAY**		

See Far, Go Further

www.hikvision.com
support@hikvision.com

© Hangzhou Hikvision Digital Technology Co., Ltd. Unless otherwise agreed, Hikvision makes no warranties, express or implied. We reserve the right to introduce modifications without notice.