HIKVISION

DS-2CD2346G3-IZ2UY (Black)
4 MP Acusense Motorized Varifocal Turret Network Camera

AcuSense

Powered by DarkFighter

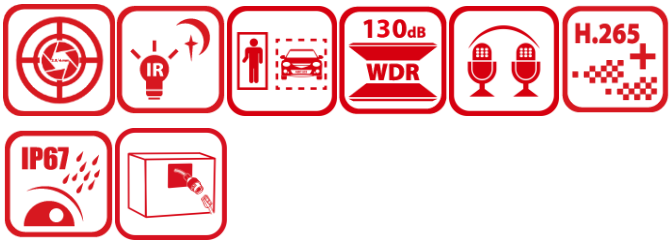

- 2.8/4 mm in one lens, point vari-focal
- Anti-corrosion design (NEMA 4X), more reliable
- Excellent low illumination performance via Powered by DarkFighter
- Crystal-clear audio with Arrayed Dual-Mic
- Person and vehicle classification based on deep learning
- Water and dust resistant (IP67)

▪ Specification

Camera	
Image Sensor	1/3" Progressive Scan CMOS
Max. Resolution	2688 × 1520
Min. Illumination	Color: 0.001 Lux @ (F1.6, AGC ON),B/W: 0 Lux with IR
Shutter Time	1 s to 1/100,000 s
Day & Night	IR cut filter
Angle Adjustment	Pan: 0° to 360°,tilt: 0° to 75°,rotate: 0° to 360°
Lens	
Lens Type	Varifocal lens, motorized lens, 2.8 to 4 mm
Focal Length & FOV	2.8 mm, horizontal FOV 99.3°, vertical FOV 54.8°, diagonal FOV 120.2° 4 mm, horizontal FOV 80.0°, vertical FOV 44.1°, diagonal FOV 94.0°
Lens Mount	Ø14
Iris Type	Fixed
Aperture	F1.6
Depth of Field	2.8 mm: 1.1 m to ∞ 4 mm: 1.3 m to ∞
DORI	
DORI	2.8mm: D: 66.6 m, O: 26.4 m, R: 13.3 m, I: 6.7 m 4mm: D: 79.2 m, O: 31.4 m, R: 15.8 m, I: 7.9 m
Illuminator	
Supplement Light Type	IR
Supplement Light Range	Up to 30 m
Smart Supplement Light	Yes
IR Wavelength	850 nm
Video	
Main Stream	50 Hz: 25 fps (2688 × 1520, 1920 × 1080, 1280 × 720) 60 Hz: 30 fps (2688 × 1520, 1920 × 1080, 1280 × 720)
Sub-Stream	50 Hz: 25 fps (1280 × 720, 640 × 480, 640 × 360) 60 Hz: 30 fps (1280 × 720, 640 × 480, 640 × 360)
Third Stream	50 Hz: 10 fps (1920 × 1080, 1280 × 720, 640 × 480, 640 × 360) 60 Hz: 10 fps (1920 × 1080, 1280 × 720, 640 × 480, 640 × 360) *Third stream is supported under certain settings.
Video Compression	Main stream: H.265/H.264/H.264+/H.265+, Sub-stream: H.265/H.264/MJPEG, Third stream: H.265/H.264, *Third stream is supported under certain settings.
Video Bit Rate	32 Kbps to 8 Mbps
H.264 Type	Baseline Profile,Main Profile,High Profile
H.265 Type	Main Profile
Bit Rate Control	CBR,VBR
Scalable Video Coding (SVC)	H.264 and H.265 encoding
Region of Interest (ROI)	1 fixed region for main stream

Audio	
Audio Type	Mono sound
Audio Compression	-2U: G.711/G.722.1/G.726/MP2L2/PCM/MP3/AAC-LC
Audio Bit Rate	-2U: 64 Kbps (G.711ulaw/G.711alaw)/16 Kbps (G.722.1)/16 Kbps (G.726)/32 to 160 Kbps (MP2L2)/8 to 320 Kbps (MP3)/16 to 64 Kbps (AAC-LC)
Audio Sampling Rate	-2U: 8 kHz/16 kHz/32 kHz/48 kHz
Environment Noise Filtering	Yes
Network	
Protocols	TCP/IP, ICMP, HTTP, HTTPS, FTP, DHCP, DNS, DDNS, RTP, RTSP, RTCP, NTP, UPnP, SMTP, IGMP, 802.1X, QoS, IPv4, IPv6, UDP, SSL/TLS, PPPoE, SNMP, WebSocket, WebSockets
Simultaneous Live View	Up to 6 channels
API	ONVIF (Profile S, Profile G),ISAPI,SDK,ISUP
User/Host	Up to 32 users 3 user levels: administrator, operator, and user
Security	Password protection, complicated password, HTTPS encryption, IP address filter, Security Audit Log, basic and digest authentication for HTTP/HTTPS, TLS 1.1/1.2/1.3, WSSE and digest authentication for Open Network Video Interface
Network Storage	NAS (NFS, SMB/CIFS),Auto Network Replenishment (ANR), Together with high-end Hikvision memory card, memory card encryption and health detection are supported.
Client	iVMS-4200,Hik-Connect,Hik-Central
Web Browser	Plug-in required live view: IE 11, Plug-in free live view: Chrome 80+, Firefox 80+, Edge 89+, Safari 13+, Local service: Chrome 80+, Firefox 80+, Edge 89+, Safari 13+
Image	
Image Parameters Switch	Yes
Image Settings	Rotate mode,saturation,brightness,contrast,sharpness,gain,white balance,adjustable by client software or web browser
Day/Night Switch	Day,Night,Auto,Schedule
Wide Dynamic Range (WDR)	130 dB
SNR	≥ 52 dB
Image Enhancement	BLC,HLC,3D DNR
Privacy Mask	4 programmable polygon privacy masks
Interface	
Ethernet Interface	1 RJ45 10 M/100 M/1000 M self-adaptive Ethernet port
On-Board Storage	Built-in memory card slot, support microSD/microSDHC/microSDXC card, up to 512 GB
Built-in Microphone	-2U: 2 built-in microphones
Reset Key	Yes
Event	
Basic Event	Motion detection (support alarm triggering by specified target types (human and vehicle)),video tampering alarm,exception
Smart Event	Scene change detection
Linkage	Upload to FTP/NAS/memory card,notify surveillance center,send email,trigger recording,trigger capture

Deep Learning Function	
Face Capture	Yes
Perimeter Protection	Line crossing, intrusion, region entrance, region exiting Support alarm triggering by specified target types (human and vehicle)
General	
Power	12 VDC ± 25%, 0.67 A, max. 8 W,Ø5.5 mm coaxial power plug, PoE: IEEE 802.3af, Class 3, max. 9.5 W
Material	Cover: metal, main body: metal
Dimension	Ø138.3 mm × 115.4 mm (Ø5.4" × 4.5")
Package Dimension	170 mm × 170 mm × 160 mm (6.7" × 6.7" × 6.3")
Weight	Approx. 550 g (1.2 lb.)
With Package Weight	Approx. 800 g (1.8 lb.)
Storage Conditions	-30 °C to 60 °C (-22 °F to 140 °F). Humidity 95% or less (non-condensing)
General Function	Heartbeat,mirror,flash log,password reset via email,pixel counter,anti-banding
Language	33 languages: English, Russian, Estonian, Bulgarian, Hungarian, Greek, German, Italian, Czech, Slovak, French, Polish, Dutch, Portuguese, Spanish, Romanian, Danish, Swedish, Norwegian, Finnish, Croatian, Slovenian, Serbian, Turkish, Korean, Traditional Chinese, Thai, Vietnamese, Japanese, Latvian, Lithuanian, Portuguese (Brazil), Ukrainian
Startup and Operating Conditions	-30 °C to 60 °C (-22 °F to 140 °F). Humidity 95% or less (non-condensing)
Approval	
EMC	CE-EMC: EN 55032:2015+A1:2020, EN 50130-4:2011+A1:2014, EN IEC 61000-3-2:2019+A1:2021, EN 61000-3-3:2013+A1:2019+A2:2021
Safety	CB: IEC 62368-1:2014+A11
Environment	CE-RoHS: 2011/65/EU, WEEE: 2012/19/EU, Reach: Regulation (EC) No 1907/2006
Protection	IP67: IEC 60529-2013

▪ Typical Application

Hikvision products are classified into three levels according to their anti-corrosion performance. Refer to the following description to choose for your using environment.

This model has MODERATE PROTECTION.

Level	Description
Top-level protection	Hikvision products at this level are equipped for use in areas where professional anti-corrosion protection is a must. Typical application scenarios include coastlines, docks, chemical plants, and more.
Moderate protection	Hikvision products at this level are equipped for use in areas with moderate anti-corrosion demands. Typical application scenarios include coastal areas about 2 kilometers (1.24 miles) away from coastlines, as well as areas affected by acid rain.
No specific protection	Hikvision products at this level are equipped for use in areas where no specific anti-corrosion protection is needed.

▪ Dimension

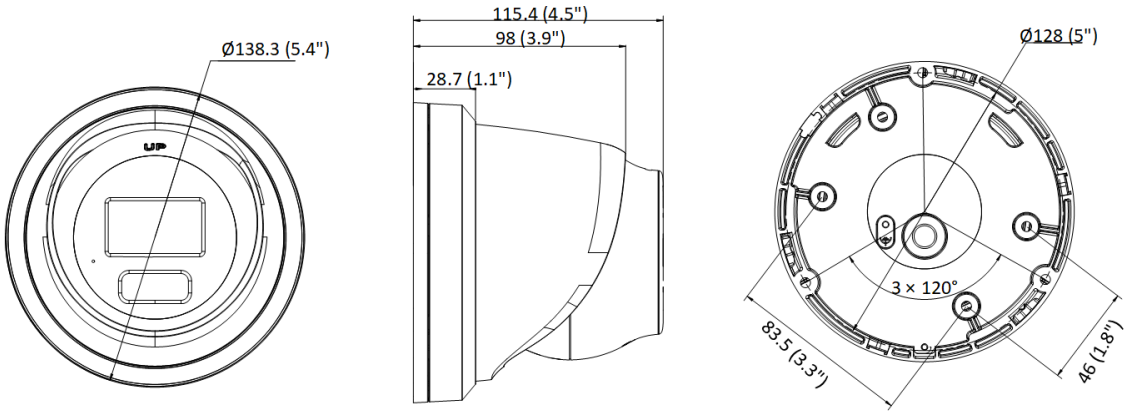

Unit: mm (inch)

▪ Accessory

▪ Optional

DS-1276ZJ-SUS(Black)	DS-1273ZJ-140B-Y(Black)	DS-1271ZJ-140-Y(Black)	DS-1475ZJ-SUS(Black)	DS-1273ZJ-140-Y(Black)
DS-1275ZJ-SUS(Black)	**DS-220AZJ-145-BAY**	**DS-1280ZJ-PT6-Y(Black)**	**DS-1275ZJ-S-SUS(Black)**	**DS-1476ZJ-SUS(Black)**

▪ Installation Methods

Corner Mounting DS-1276ZJ-SUS(Black)+DS-1280ZJ-PT6-Y(Black)+DS-1273ZJ-140-Y(Black)	Corner Mounting DS-1476ZJ-SUS(Black)+DS-220AZJ-145-BAY	Wall Mounting DS-1273ZJ-140B-Y(Black)+DS-1253ZJ-L(Black)	Wall Mounting DS-1273ZJ-140-Y(Black)+DS-1253ZJ-L(Black)	Wall Mounting DS-220AZJ-145-BAY

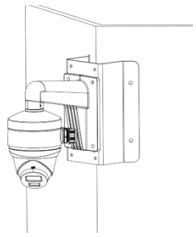	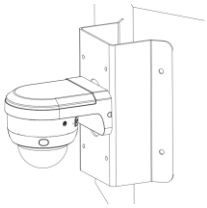		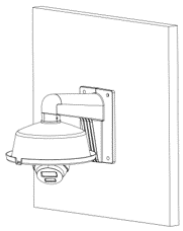	
Pendant Mounting DS-1271ZJ-140-Y(Black)+DS-1280ZJ-PT6-Y(Black)	**Vertical Pole Mounting DS-1475ZJ-SUS(Black)+DS-220AZJ-145-BAY**	**Vertical Pole Mounting DS-1275ZJ-SUS(Black)+DS-1273ZJ-140B-Y(Black)**	**Vertical Pole Mounting DS-1275ZJ-S-SUS(Black)+DS-220AZJ-145-BAY**	**Junction Box DS-1280ZJ-PT6-Y(Black)**
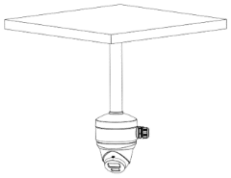				

See Far, Go Further

www.hikvision.com
support@hikvision.com

© Hangzhou Hikvision Digital Technology Co., Ltd. Unless otherwise agreed, Hikvision makes no warranties, express or implied. We reserve the right to introduce modifications without notice.