DS-2CD1B67G3-LIUF/LSRB
6 MP ColorVu 3.0 Fixed Bullet Network Camera

ColorVu 3.0





- SoundMax produces a louder alarm sound to deter trespassers
- HikAI-ISP for excellent noise reduction effect
- Super clear 24/7 colorful imaging with ColorVu 3.0 technology
- Motion Detection 3.0, more accurate on person and vehicle detection
- -LSL/-LSRB: Strobe Light & Audio Alarm to deter intruders
- -LSL/-LSRB: Two-Way Audio via camera and Hik-Connect
- Smart Hybrid Light: integrates IR and white lights, 3 supplemental lighting modes
- -F: On-board storage with SD card up to 512 GB (Optional)
- Water and dust resistant (IP67)

▪ Specification

Camera	
Image Sensor	1/2.4" Progressive Scan CMOS
Max. Resolution	3200 × 1800
Min. Illumination	Color: 0.0005 Lux @ (F1.0, AGC ON),0 Lux with light
Shutter Time	1 s to 1/100,000 s
Day & Night	IR cut filter
Angle Adjustment	Pan: 0° to 360°,tilt: 0° to 90°,rotate: 0° to 360°
Lens	
Lens Type	Fixed focal lens, 2.8 and 4 mm optional
Focal Length & FOV	2.8 mm, horizontal FOV 109°, vertical FOV 60°, diagonal FOV 130° 4 mm, horizontal FOV 89°, vertical FOV 49°, diagonal FOV 105°
Lens Mount	M12
Iris Type	Fixed
Aperture	F1.0
Depth of Field	2.8 mm: 1.9 m to ∞ 4 mm: 2.4 m to ∞
DORI	
DORI	2.8 mm, D: 68 m, O: 27 m, R: 13 m, I: 6 m 4 mm, D: 83 m, O: 33 m, R: 16 m, I: 8 m
Illuminator	
Supplement Light Type	IR, White Light
Supplement Light Range	Up to 50 m
Smart Supplement Light	Yes
IR Wavelength	850 nm
Video	
Main Stream	50 Hz: 20 fps (3200 × 1800, 2688 × 1520, 1920 × 1080, 1280 × 720) 60 Hz: 20 fps (3200 × 1800, 2688 × 1520, 1920 × 1080, 1280 × 720)
Sub-Stream	50 Hz: 20 fps (1280 × 720, 640 × 480, 640 × 360) 60 Hz: 20 fps (1280 × 720, 640 × 480, 640 × 360)
Video Compression	Main stream: H.265+/H.265/H.264+/H.264, Sub-stream: H.265/H.264/MJPEG
Video Bit Rate	32 Kbps to 16 Mbps
H.264 Type	Baseline Profile, Main Profile, High Profile
H.265 Type	Main Profile
Bit Rate Control	CBR, VBR
Scalable Video Coding (SVC)	H.264 and H.265 encoding
Region of Interest (ROI)	1 fixed region for main stream
Audio	
Audio Type	Mono sound
Audio Compression	G.711ulaw/G.711alaw/G.722.1/G.726/MP2L2/PCM/AAC-LC/MP3
Audio Bit Rate	64 Kbps (G.711)/16 Kbps (G.722.1)/16 Kbps (G.726)/32 to 160 Kbps (MP2L2)/16 to 64 Kbps (AAC-LC)
Audio Sampling Rate	8 kHz/16 kHz
Environment Noise Filtering	Yes

Network	
Protocols	TCP/IP, ICMP, DHCP, DNS, HTTP, RTP, RTSP, RTCP, NTP, IPv4, IPv6, IGMP, UDP, QoS, FTP, SMTP, UPnP
Simultaneous Live View	Up to 6 channels
API	ONVIF (Profile S, Profile G, Profile T),ISAPI,SDK
User/Host	Up to 32 users 3 user levels: administrator, operator, and user
Security	Password protection, complicated password, watermark, basic and digest authentication for HTTP, WSSE and digest authentication for Open Network Video Interface, security audit log, host authentication (MAC address)
Client	iVMS-4200,Hik-Connect
Web Browser	Local service: Chrome 91+, Firefox 88+, Edge 91+
Image	
Image Settings	Rotate mode, saturation, brightness, contrast, sharpness, gain, white balance, adjustable by client software or web browser
Day/Night Switch	Day, Night, Auto, Schedule
Wide Dynamic Range (WDR)	120 dB
SNR	≥ 52 dB
Image Enhancement	BLC, HLC, 3D DNR
Privacy Mask	4 programmable polygon privacy masks
Transducer	
Transducer Type	NA
Detection Angle	NA
Detection Range	NA
Interface	
Ethernet Interface	1 RJ45 10 M/100 M self-adaptive Ethernet port
On-Board Storage	-LIU/LS(L)(RB): NA-LIUF/LS(L)(RB): Built-in memory card slot, support microSD/microSDHC/microSDXC card, up to 512 GB
Built-in Microphone	Yes,1 built-in microphone
Built-in Speaker	Yes, Max. power consumption: 2 W, max. sound pressure level: 10 cm: 90 dB.
Audio	NA
Alarm	NA
Reset Key	-LIU/LS(L)(RB): NA-LIUF/LS(L)(RB): YES
Event	
Basic Event	Motion detection (support alarm triggering by specified target types (person and vehicle)), video tampering alarm, exception
Linkage	-LIUF/S(L)(RB): trigger recording, notify surveillance center, send email, trigger capture -LIU: notify surveillance center, send email, trigger capture
General	
Power	12 VDC ± 25%, 1.17 A, max. 14 W, Ø5.5 mm coaxial power plug, reverse polarity protection, PoE: IEEE 802.3at, Class 4, max. 15 W
Material	Front cover: metal, body: plastic, bracket: plastic
Dimension	336.8 mm × 197 mm × 144.6 mm (13.26" × 7.76" × 5.69")
Package Dimension	326 mm × 183 mm × 198 mm (12.83" × 7.20" × 7.80")
Weight	-LIU/LS(L)(RB): Approx. 690 g (1.52 lb.) -LIUF/LS(L)(RB): Approx. 730g (1.61 lb.)

With Package Weight	-LIU/LS(L)(RB): Approx. 1725 g (3.80 lb.) -LIUF/LS(L)(RB): Approx. 1765g (3.89 lb.)
Storage Conditions	-30 °C to 60 °C (-22 °F to 140 °F). Humidity 95% or less (non-condensing)
Startup and Operating Conditions	-30 °C to 60 °C (-22 °F to 140 °F). Humidity 95% or less (non-condensing)
Language	English, Russian, Ukrainian, Arabic, Spanish, French, Portuguese, Turkish, Polish, German
General Function	Heartbeat, mirror, flash log, password reset via email, password protection, anti-banding
Flashing Light	-LSL: White Light -LSRB: Red and Blue Light
Approval	
EMC	CE-EMC: EN 55032:2015+A1:2020, EN 50130-4:2011+A1:2014, EN IEC 61000-3-2:2019+A1:2021, EN 61000-3-3:2013+A1:2019+A2:2021
Safety	CB: IEC 62368-1:2014+A11
Environment	CE-RoHS: 2011/65/EU, WEEE: 2012/19/EU, Reach: Regulation (EC) No 1907/2006
Protection	IP67: IEC 60529-2013

▪ Available Model

DS-2CD1B67G3-LIUF/LSRB(2.8mm)

DS-2CD1B67G3-LIUF/LSRB(4mm)

▪ Dimension

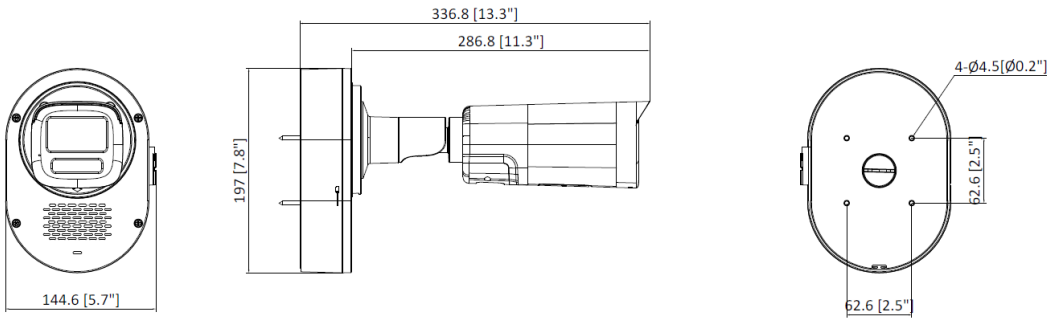

Unit: mm(inch)

▪ Accessory

▪ Optional

DS-1275ZJ-SUS


▪ Installation Methods

Vertical Pole Mounting DS-1275ZJ-SUS
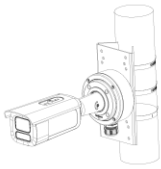

See Far, Go Further

www.hikvision.com
support@hikvision.com

© Hangzhou Hikvision Digital Technology Co., Ltd. Unless otherwise agreed, Hikvision makes no warranties, express or implied. We reserve the right to introduce modifications without notice.

HIKVISION®