HIKVISION

600-3000VA

Uninterruptible Power Systems

Operation Manual

Legal Information

About this Document

- This Document includes instructions for using and managing the Product. Pictures, charts, images and all other information hereinafter are for description and explanation only.
- The information contained in the Document is subject to change, without notice, due to firmware updates or other reasons. Please find the latest version of the Document at the Hikvision website (https://www.hikvision.com). Unless otherwise agreed, Hangzhou Hikvision Digital Technology Co., Ltd. or its affiliates (hereinafter referred to as "Hikvision") makes no warranties, express or implied.
- Please use the Document with the guidance and assistance of professionals trained in supporting the Product.

About this Product

This product can only enjoy the after-sales service support in the country or region where the purchase is made.

Acknowledgment of Intellectual Property Rights

- Hikvision owns the copyrights and/or patents related to the technology embodied in the Products described in this Document, which may include licenses obtained from third parties.
- Any part of the Document, including text, pictures, graphics, etc., belongs to Hikvision. No part of this Document may be excerpted, copied, translated, or modified in whole or in part by any means without written permission.
- HIKVISION and other Hikvision's trademarks and logos are the properties of Hikvision in various jurisdictions.
- Other trademarks and logos mentioned are the properties of their respective owners.

LEGAL DISCLAIMER

- TO THE MAXIMUM EXTENT PERMITTED BY APPLICABLE LAW, THIS DOCUMENT AND THE PRODUCT DESCRIBED, WITH ITS HARDWARE, SOFTWARE AND FIRMWARE, ARE PROVIDED "AS IS" AND "WITH ALL FAULTS AND ERRORS". HIKVISION MAKES NO WARRANTIES, EXPRESS OR IMPLIED, INCLUDING WITHOUT LIMITATION, MERCHANTABILITY, SATISFACTORY QUALITY, OR FITNESS FOR A PARTICULAR PURPOSE. THE USE OF THE PRODUCT BY YOU IS AT YOUR OWN RISK. IN NO EVENT WILL HIKVISION BE LIABLE TO YOU FOR ANY SPECIAL, CONSEQUENTIAL, INCIDENTAL, OR INDIRECT DAMAGES, INCLUDING, AMONG OTHERS, DAMAGES FOR LOSS OF BUSINESS PROFITS, BUSINESS INTERRUPTION, OR LOSS OF DATA, CORRUPTION OF SYSTEMS, OR LOSS OF DOCUMENTATION, WHETHER BASED ON BREACH OF CONTRACT, TORT (INCLUDING

NEGLIGENCE), PRODUCT LIABILITY, OR OTHERWISE, IN CONNECTION WITH THE USE OF THE PRODUCT, EVEN IF HIKVISION HAS BEEN ADVISED OF THE POSSIBILITY OF SUCH DAMAGES OR LOSS.

- YOU ACKNOWLEDGE THAT THE NATURE OF THE INTERNET PROVIDES FOR INHERENT SECURITY RISKS, AND HIKVISION SHALL NOT TAKE ANY RESPONSIBILITIES FOR ABNORMAL OPERATION, PRIVACY LEAKAGE OR OTHER DAMAGES RESULTING FROM CYBER-ATTACK, HACKER ATTACK, VIRUS INFECTION, OR OTHER INTERNET SECURITY RISKS; HOWEVER, HIKVISION WILL PROVIDE TIMELY TECHNICAL SUPPORT IF REQUIRED.
- YOU AGREE TO USE THIS PRODUCT IN COMPLIANCE WITH ALL APPLICABLE LAWS, AND YOU ARE SOLELY RESPONSIBLE FOR ENSURING THAT YOUR USE CONFORMS TO THE APPLICABLE LAW. ESPECIALLY, YOU ARE RESPONSIBLE, FOR USING THIS PRODUCT IN A MANNER THAT DOES NOT INFRINGE ON THE RIGHTS OF THIRD PARTIES, INCLUDING WITHOUT LIMITATION, RIGHTS OF PUBLICITY, INTELLECTUAL PROPERTY RIGHTS, OR DATA PROTECTION AND OTHER PRIVACY RIGHTS. YOU SHALL NOT USE THIS PRODUCT FOR ANY PROHIBITED END-USES, INCLUDING THE DEVELOPMENT OR PRODUCTION OF WEAPONS OF MASS DESTRUCTION, THE DEVELOPMENT OR PRODUCTION OF CHEMICAL OR BIOLOGICAL WEAPONS, ANY ACTIVITIES IN THE CONTEXT RELATED TO ANY NUCLEAR EXPLOSIVE OR UNSAFE NUCLEAR FUEL-CYCLE, OR IN SUPPORT OF HUMAN RIGHTS ABUSES.
- IN THE EVENT OF ANY CONFLICTS BETWEEN THIS DOCUMENT AND THE APPLICABLE LAW, THE LATTER PREVAILS.

© Hangzhou Hikvision Digital Technology Co., Ltd. All rights reserved.

SAFETY-WARNING

- The voltages inside UPS may be hazardous. Do not attempt to disassemble the unit. The unit contains no user serviceable parts. Only factory service personnel may perform repairs.
- Internal battery voltage is 12Vdc. Sealed, lead-acid,6 cells battery.
- Connection to any other type of receptacle other than a two-pole, three-wire grounded receptacle may result in shock hazard as well as violating to local electrical codes.
- In the event of an emergency, press the OFF button and disconnect the power cord from the AC power supply to properly disable the UPS.
- Do not allow liquids or any external objects to enter the UPS. Do not place beverages or any other liquid-containing vessels on or near the unit.
- This unit is designed for installation in a controlled environment (temperature controlled, indoor area free of conductive contaminants). Avoid installing the UPS in locations where there is static or flowing water, or excessive humidity.
- Do not plug the UPS input into its own output.
- Do not attach a power strip or surge suppressor to the UPS.
- Do not connect non-computer – related items, such as medical equipment, life-support equipment, microwave ovens, or vacuum cleaners to UPS.
- To reduce the risk of overheating the UPS, sufficient heat dissipation space should be reserved when UPS is working. Do not cover the UPS cooling vents and avoid exposing the unit to direct sunlight or installing the unit near heat emitting appliances such as air heaters or furnaces.
- Unplug the UPS prior to cleaning and do not use liquid or spray detergent.
- Do not dispose the batteries into fire as they may explode.
- Do not open or mutilate the battery or batteries. Released electrolyte is harmful to the skin and eyes. It may be toxic.
- A battery can present a risk of electrical shock and high short circuit current. The following precautions should be observed when working on batteries:
  (1) Remove watches, rings, or other metal objects from the hands.
  (2) Use tools with insulated handles.
  (3) Wear rubber gloves and boots.
  (4) Do not lay tools or metal parts on top of batteries.
  (5)Disconnect charging source prior to connecting or disconnecting batteries terminals.
- Servicing of batteries should be performed or supervised by technical and authorized personnel only.
- When replacing batteries, replace with the same number and type of sealed lead - acid battery. The maximum ambient temperature rating is 40℃。

- During the installation of this equipment is should be assured that the sum of the leakage currents of the UPS and the connected loads does not exceed 3.5mA.
- Beware of possibility of electric shock when disconnecting of this unit from the mains, hazardous voltage still may be accessible through supply from battery. The battery supply should be therefore disconnected from the plus and minus terminals of the battery when maintenance or service work inside the UPS is necessary.
- Contact the nearest hazardous waste disposal station when the products or components are discarded.

INTRODUCTION

This UPS is specially designed for personal computer with multi-functions. Its light weight, compact design perfect fits to the limited working environment. The line of UPS is equipped with boost and buck AVR to stabilize input voltage range. It is also built-in with DC start function. This function enables the UPS to be started up without AC power supplied. Although it's small UPS, The main features of UPS are listed below:

- Microprocessor control guarantees high reliability.
- Equipped with boost and buck AVR.
- DC start function.
- Auto restart while AC recovery.
- Compact size, light Weight.
- Provides AC overload protection.

TROUBLE SHOOTING

Symptom	Possible Cause	Proposed action
No LCD lighting (for LCD model), or no LED display(for LED model) on the front panel.	1. Battery weak.	1.Charge battery up to 8 hours.
	2. Battery defect.	2. Replace with the same type of battery.
	3. Power switch is not pressed.	3. Press the power switch again.
Alarm buzzer beeps continuously when AC supply is normal.	Overload of the UPS.	Verify that the load matches the UPS capability specified in the specs.

When power failure, back-up time is shorten.	1.Overload of the UPS.	1.Remove some non-critical load.
	2. Battery voltage is too low.	2.Charge battery 8 hours or more.
	3.Battery defect due to high temperature operation environment, or improper operation to battery.	3.Replace with the same type of battery.
Mains normal but Battery Mode indicator lights(for LCD model), or Yellow LED is flashing(for LED model)	Power cord is loose.	Reconnect the power cord properly.

If any abnormal situations occur that are not listed above, please call service people immediately.

SYSTEM DESCRIPTION

Front panel:

1.Power Switch

2.LED Indicators

AC Mode: Green LED lighting

Battery Mode: Yellow LED flashing

Fault Mode: Red LED lighting

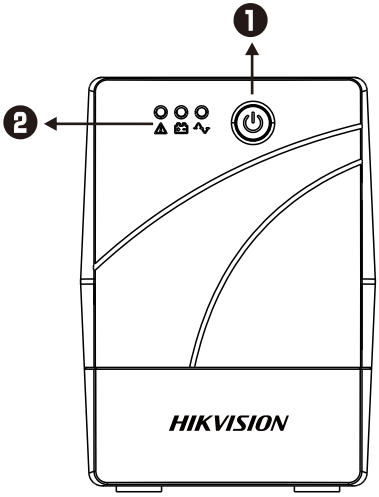

DS-UPS600-R/X
DS-UPS1000-R/X

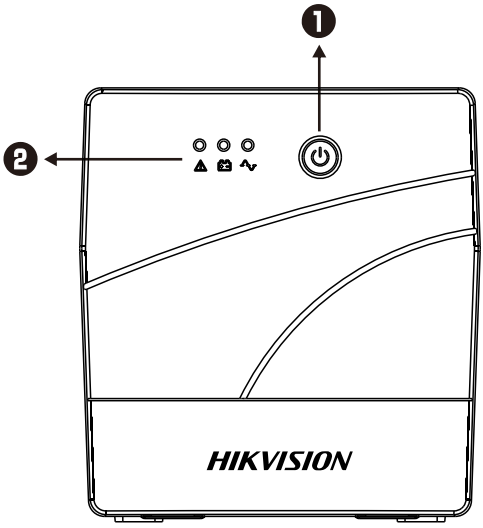

DS-UPS1200-R/X

3.LCD Indicators

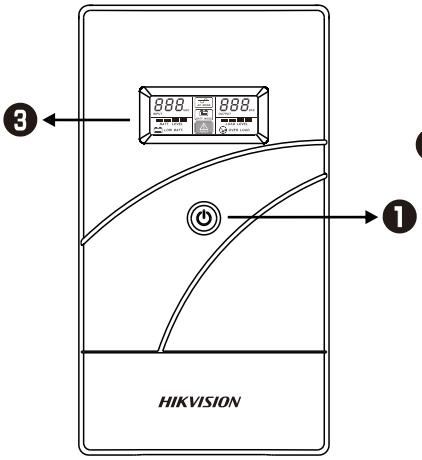

DS-UPS2000-R/X

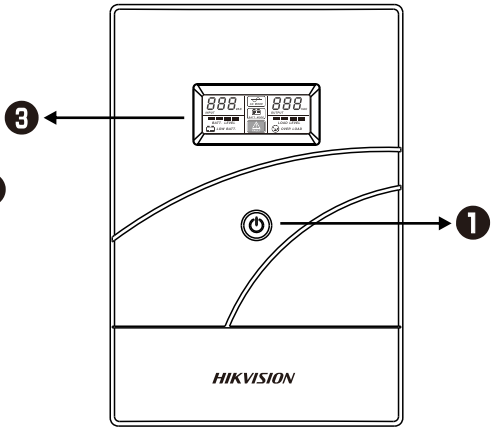

DS-UPS3000-R/X

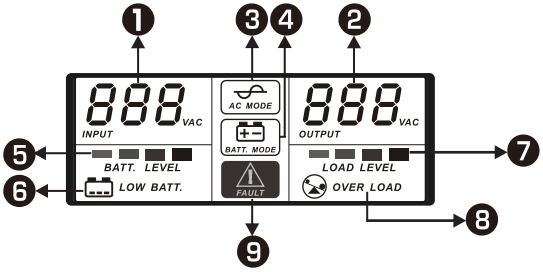

1.Input voltage
2.Output voltage
3.AC mode (UPS in AVR mode, this LCD symbol flashes)
4.Battery mode (when AC input voltage is abnormal, this LCD symbol lights)
5.Battery level(Battery capability)
6.Low battery (when battery voltage is low, this LCD symbol flashes)
7.Load level(Load percent)
8.Over load (when there is output over loading, this LCD symbol flashes)
9.Fault mode (this LCD symbol lights when UPS in fault mode, such as output shorted, over charge, over load)

Back Panel :

1.AC input
2.Output receptacles
3.Breaker
4.USB
5.Bypass

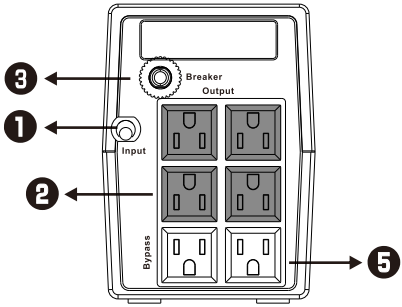

DS-UPS600-R/X
DS-UPS1000-R/X

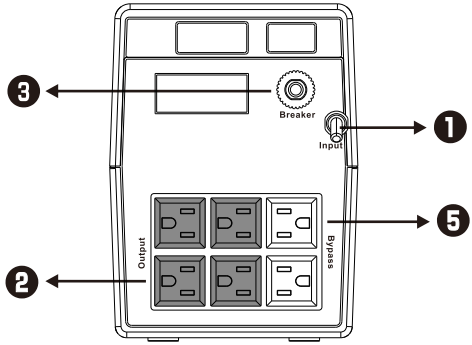

DS-UPS1200-R/X

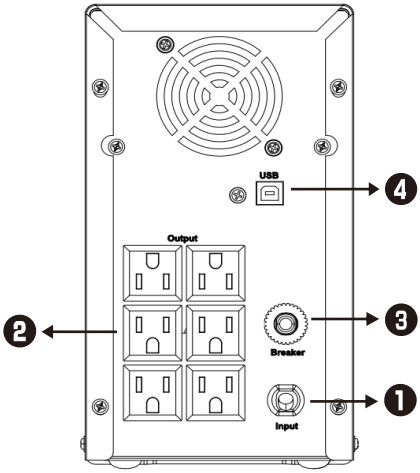

DS-UPS2000-R/X

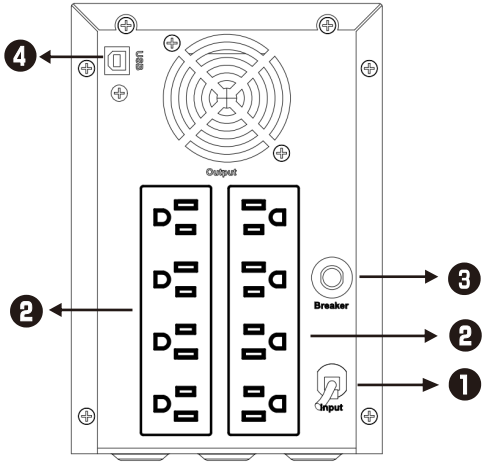

DS-UPS3000-R/X

1.Inspection

Remove the UPS from its packaging and inspect it for damage that may have occurred during shipping. If any damage is discovered, repack the unit and return it to the place of purchase.

2.Charging

This unit is shipped from the factory with its internal battery fully charged, however, some charge may be lost during shipping and the battery should be recharged prior to use. Turn on the UPS, plug the unit into an appropriate power supply and allow the UPS to charge fully by leaving it plugged in for at lease 6 hours with no load (no electrical devices such as computers, monitors, etc.) connected.

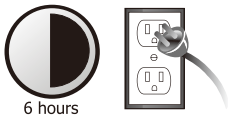

3. Storage

Before storing, charge the UPS 5 hours. Store the UPS covered and upright in a cool, dry location. During storage, recharge the battery in accordance with the following table:

Storage Temperature	Recharge Frequency	Charging Duration
-25°C - 40°C	Every 3 months	6-8 hours
40°C - 45°C	Every 2 months	6-8 hours

4.Placement

Install the UPS unit in any protected environment that provides adequate airflow around the unit, and is free from excessive dust, corrosive fumes and conductive contaminants. Do not operate your UPS in an environment where the ambient temperature or humidity is high.

In addition, at least 20cm space should be reserved around the UPS (including the top) to avoid interference with surrounding devices and ensure the heat dissipation.

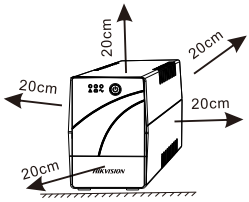

5.Connection

Plug the UPS into a 2-pole, 3-wire grounded receptacle. Then connect one computer-related device into each of the power receptacles supplied on the back of the UPS.

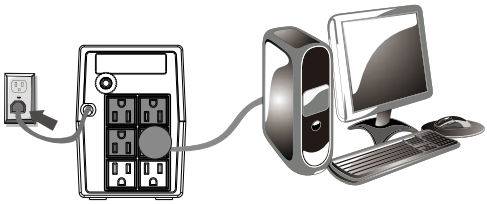

6.Turn On/Off

To turn on the UPS unit , press the power switch lightly. To turn off the UPS unit, press the power switch again.

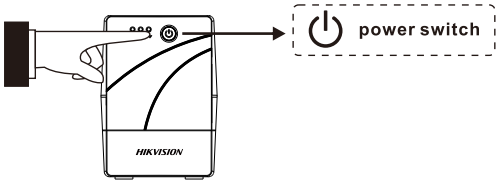

7.DC Start

All Series are equipped with DC Start. To start the UPS when AC utility power is not available, simply press the power switch.

UPS STATUS,ALARM CONDITIONS AND ALERTS

Condition	LED Color (Note 1)	Solid/Flashing	Audible Alarm
Normal mode	Green	Solid	(none)
Battery mode	Yellow	Flashes	Every 10 seconds
Battery low	Yellow	Flashes	Every 1 second
Overload at Normal mode	Green	Solid	Every 0.5 second
Overload at Battery mode	Yellow	Flashes	UPS shuts down immediately
Fault	Red	Solid	Continuous until UPS shuts down

*Note 1 : For LCD model please refer to section”3.LCD Indicator”on page 6.

SPECIFICATION

MODEL		DS-UPS600-R/X	DS-UPS1000-R/X	DS-UPS1200-R/X
CAPACITY	VA	600VA	1000VA	1200VA
INPUT	Voltage	110VAC/120VAC		
	Voltage Range	81-134VAC/89-145VAC		
OUTPUT	Voltage Regulation (Batt.Mode)	±10%		
	Frequency	50Hz or 60Hz		
	Frequency Regulation (Batt.Mode)	±1Hz		
	Output Waveform	Simulated Sine Wave		
BATTERY	Battery Type	12V/7.0AHx1	12V/9.0AHx1	12V/7.0AHx2
	Recharge Time	4~6 hours recover to 90% capacity		6~8 hours recover to 90% capacity
TRANSFER TIME	Typical	Typical 2-6ms, 10ms Max.		
PROTECTION	Full Protection	Discharge,overcharge,and overload protection		
PHYSICAL	Dimension(mm),LxWxH	277x101x142	277x101x142	353x149x162
ENVIRONMENT	Operating Environment	0-90%RH@0-40℃ (non-condensing)		
	Noise Level	Less than 45dB		

SPECIFICATION

MODEL		DS-UPS2000-R/X	DS-UPS3000-R/X
CAPACITY	VA	2000VA	3000VA
INPUT	Voltage	110VAC/120VAC	
	Voltage Range	81-134VAC/89-145VAC	
OUTPUT	Voltage Regulation (Batt.Mode)	±10%	
	Frequency	50Hz or 60Hz	
	Frequency Regulation (Batt.Mode)	±1Hz	
	Output Waveform	Simulated Sine Wave	
BATTERY	Battery Type	12V/9.0AHx2	12V/9.0AHx4
	Recharge Time	6~8 hours recover to 90% capacity	
TRANSFER TIME	Typical	Typical 2-6ms, 10ms Max.	
PROTECTION	Full Protection	Discharge,overcharge,and overload protection	
PHYSICAL	Dimension(mm),LxWxH	382.4x124x225.1	433.5x145x208.5
ENVIRONMENT	Operating Environment	0-90%RH@0-40℃ (non-condensing)	
	Noise Level	Less than 55dB	

See Far, Go Further