HIKVISION

DS-2CD3181G2-LIUF

8 MP Smart Hybrid Light Motion 2.0 Fixed Dome Network Camera

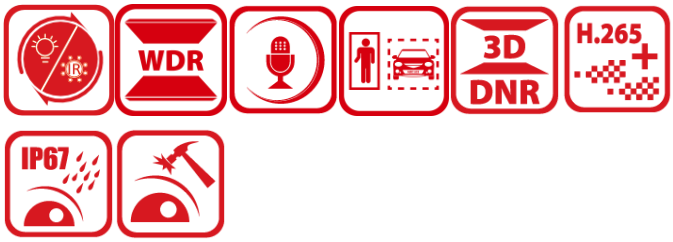

Hikvision has been dedicated to develop products with security since established. Hikvision always follows security by design principle and has adopted many methods of security technologies into our product development lifecycle, including terminal security, data security, application security, network security, and privacy protection. In the meantime, the security technologies used by Hikvision are all in compliance with local applicable laws and safety regulations. These security measures could enhance product's cyber security defense capability and protect your devices as well as your data from malicious cyber attacks.

- High quality imaging with 8 MP resolution
- Support Human and Vehicle Detection
- Smart Hybrid Light: advanced technology with long range
- Efficient H.265+ compression technology
- Clear imaging against strong back light due to 120 dB WDR technology
- 3D DNR technology delivers clean and sharp images
- Built-in microphone for real-time audio security
- Support on-board storage up to 512 GB (SD card slot)
- Water and dust resistant (IP67) and vandal proof (IK08)

▪ Specification

Camera	
Image Sensor	1/2.7" Progressive Scan CMOS
Max. Resolution	3840 × 2160
Min. Illumination	Color: 0.01 Lux @ (F2.0, AGC ON),0 Lux with light
Shutter Time	1/3 s to 1/100,000 s
Day & Night	IR cut filter
Angle Adjustment	Pan: 0° to 355°,tilt: 0° to 75°,rotate: 0° to 355°
Lens	
Lens Type	Fixed focal lens, 2.8 and 4 mm optional
Focal Length & FOV	2.8 mm, horizontal FOV 113°, vertical FOV 62°, diagonal FOV 134° 4 mm, horizontal FOV 90°, vertical FOV 49°, diagonal FOV 108°
Lens Mount	M12
Iris Type	Fixed
Aperture	F2.0
DORI	
DORI	2.8 mm, D: 79 m, O: 31 m, R: 15 m, I: 7 m 4 mm, D: 102 m, O: 40 m, R: 20 m, I: 10 m
Illuminator	
Supplement Light Type	IR,White Light
Supplement Light Range	Up to 40 m
Smart Supplement Light	Yes
IR Wavelength	850 nm
Video	
Main Stream	50 Hz: 20 fps (3840 × 2160, 3200 × 1800, 2688 × 1520, 1920 × 1080, 1280 × 720) 60 Hz: 20 fps (3840 × 2160, 3200 × 1800, 2688 × 1520, 1920 × 1080, 1280 × 720)
Sub-Stream	50 Hz: 20 fps (1280 × 720, 640 × 480, 640 × 360) 60 Hz: 20 fps (1280 × 720, 640 × 480, 640 × 360)
Third Stream	50 Hz: 20 fps (1280 × 720, 640 × 480, 640 × 360) 60 Hz: 20 fps (1280 × 720, 640 × 480, 640 × 360)
Video Compression	Main stream: H.265+/H.265/H.264+/H.264, Sub-stream: H.265/H.264/MJPEG
Video Bit Rate	32 Kbps to 16 Mbps
H.264 Type	Baseline Profile,Main Profile,High Profile
H.265 Type	Main Profile
Bit Rate Control	CBR,VBR
Region of Interest (ROI)	1 fixed region for main stream and sub-stream
Audio	
Audio Type	Mono sound
Environment Noise Filtering	Yes
Audio Sampling Rate	8 kHz/16 kHz
Audio Compression	G.711/G.722.1/G.726/MP2L2/PCM/AAC-LC
Audio Bit Rate	64 Kbps (G.711ulaw/G.711alaw)/16 Kbps (G.722.1)/16 Kbps (G.726)/32 to 160 Kbps (MP2L2)/16 to 64 Kbps (AAC-LC)

Network	
API	ONVIF (Profile S, Profile G, Profile T),ISAPI,SDK
Security	Password protection, complicated password, HTTPS encryption, 802.1X authentication (EAP-MD5), watermark, basic and digest authentication for HTTP/HTTPS, WSSE and digest authentication for Open Network Video Interface, RTP/RTSP over HTTPS, security audit log, TLS 1.2, TLS 1.3, host authentication (MAC address)
Simultaneous Live View	Up to 6 channels
Protocols	TCP/IP, ICMP, DHCP, DNS, HTTP, RTP, RTSP, RTCP, NTP, IGMP, IPv4, IPv6, UDP, QoS, FTP, SMTP, HTTPS, DDNS, UPnP, 802.1X
User/Host	Up to 32 users 3 user levels: administrator, operator, and user
Client	iVMS-4200,Hik-Connect
Web Browser	Plug-in required live view: IE 11, Local service: Chrome 80+, Firefox 80+, Edge 89+, Safari 13+
Image	
Wide Dynamic Range (WDR)	120 dB
SNR	≥ 52 dB
Day/Night Switch	Day,Night,Auto,Schedule
Image Enhancement	BLC,HLC,3D DNR
Image Settings	Rotate mode,saturation,brightness,contrast,sharpness,gain,white balance,adjustable by client software or web browser
Privacy Mask	4 programmable polygon privacy masks
Interface	
Ethernet Interface	1 RJ45 10 M/100 M self-adaptive Ethernet port
On-Board Storage	Built-in memory card slot, support microSD/microSDHC/microSDXC card, up to 512 GB
Built-in Microphone	Yes,1 built-in microphone
Reset Key	Yes
Event	
Basic Event	Motion detection (support alarm triggering by specified target types (human and vehicle)),video tampering alarm,exception
Smart Event	Line crossing detection, intrusion detection
Linkage	Upload to FTP/memory card, notify surveillance center, send email, trigger recording, trigger capture
General	
Power	12 VDC ± 25%, 0.55 A, max. 6.6 W,Ø5.5 mm coaxial power plug,reverse polarity protection, PoE: IEEE 802.3af, Class 3, max. 8 W
Material	Base: aluminum alloy, cover: plastic
Dimension	Ø121.5 mm × 97.6 mm (Ø4.78" × 3.84")
Package Dimension	150 mm × 150 mm × 141 mm (5.91" × 5.91" × 5.55")
Weight	Approx. 485 g (1.1 lb.)
With Package Weight	Approx. 690 g (1.5 lb.)
Storage Conditions	-30 °C to 60 °C (-22 °F to 140 °F). Humidity 95% or less (non-condensing)
Startup and Operating Conditions	-30 °C to 60 °C (-22 °F to 140 °F). Humidity 95% or less (non-condensing)

Language	English, Ukrainian
General Function	Heartbeat,mirror,flash log,password reset via email,pixel counter,password protection,anti-banding
Approval	
EMC	CE-EMC: EN 55032:2015+A1:2020, EN 50130-4:2011+A1:2014, EN IEC 61000-3-2:2019+A1:2021, EN 61000-3-3:2013+A1:2019+A2:2021, IC: ICES-003: Issue 7
Safety	UL: UL 62368-1, CB: IEC 62368-1:2014+A11, CE-LVD: EN 62368-1:2014/A11:2017, BIS: IS 13252 (Part 1): 2010/IEC 60950-1:2005
Environment	CE-RoHS: 2011/65/EU
Protection	IP67: IEC 60529-2013,IK08: IEC 62262:2002

▪ Typical Application

Hikvision products are classified into three levels according to their anti-corrosion performance. Refer to the following description to choose for your using environment.

This model has NO SPECIFIC PROTECTION.

Level	Description
Top-level protection	Hikvision products at this level are equipped for use in areas where professional anti-corrosion protection is a must. Typical application scenarios include coastlines, docks, chemical plants, and more.
Moderate protection	Hikvision products at this level are equipped for use in areas with moderate anti-corrosion demands. Typical application scenarios include coastal areas about 2 kilometers (1.24 miles) away from coastlines, as well as areas affected by acid rain.
No specific protection	Hikvision products at this level are equipped for use in areas where no specific anti-corrosion protection is needed.

▪ Dimension

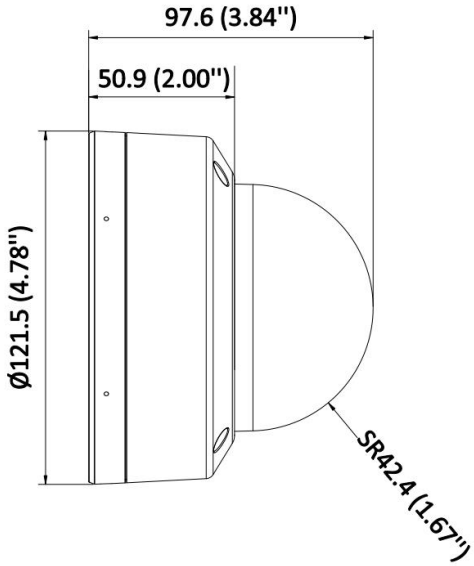

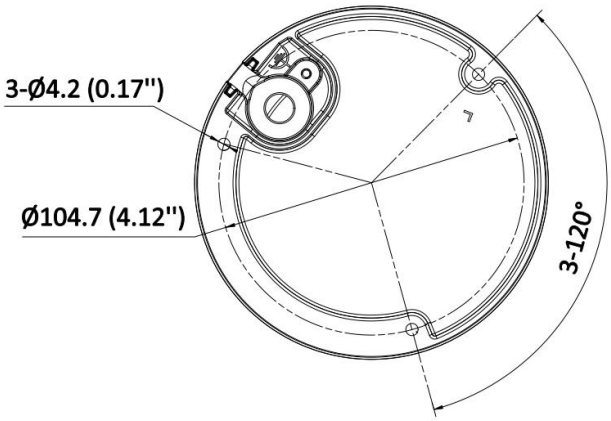

Unit: mm (inch)

▪ Accessory

▪ Optional

DS-220AZJ-130-WA	DS-1275ZJ-SUS	DS-1280ZJ-DM46	DS-1271ZJ-120	DS-1272ZJ-120
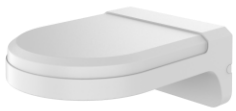				
DS-1475ZJ-SUS	**DS-1476ZJ-SUS**	**DS-1275ZJ-S-SUS**	**DS-1276ZJ-SUS**	**DS-1272ZJ-120B**
DS-4221ZJ-WC	**DS-220AZJ-145-WA**			

▪ Installation Methods

Wall Mounting DS-220AZJ-130-WA	Wall Mounting DS-1272ZJ-120+DS-1280ZJ-DM46	Wall Mounting DS-1272ZJ-120B	Wall Mounting DS-220AZJ-145-WA	Vertical Pole Mounting DS-1275ZJ-SUS+DS-1272ZJ-120+DS-1280ZJ-DM46
	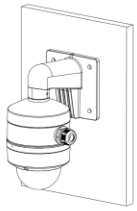	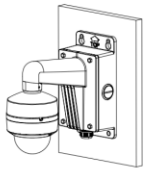		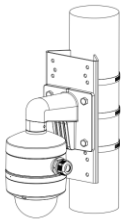
Vertical Pole Mounting DS-1475ZJ-SUS+DS-220AZJ-130-WA	Vertical Pole Mounting DS-1275ZJ-S-SUS+DS-220AZJ-130-WA	Junction Box DS-1280ZJ-DM46	Pendant Mounting DS-1271ZJ-120	Corner Mounting DS-1476ZJ-SUS+DS-220AZJ-130-WA
		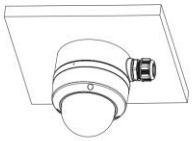		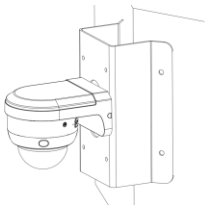
Corner Mounting DS-1276ZJ-SUS+DS-1272ZJ-120B+DS-1280ZJ-DM46	In-Ceiling Mounting DS-4221ZJ-WC			
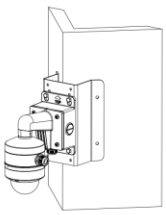	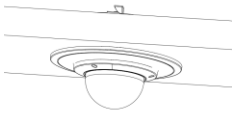			

See Far, Go Further

www.hikvision.com
support@hikvision.com

© Hangzhou Hikvision Digital Technology Co., Ltd. Unless otherwise agreed, Hikvision makes no warranties, express or implied. We reserve the right to introduce modifications without notice.