HIKVISION

DS-2SF7C842MXG2/LM-ELY/26

DeepinViewX TandemVu 7C Series Panoramic 8 MP 42X DarkFighter Network Speed Dome

DarkFighter 2.0

DeepinView X

3D DNR | IP67 | IR | WDR | Ultra Low Light

Hikvision has been dedicated to develop products with security since established.
Hikvision always follows security by design principle and has adopted many methods of security technologies into our product development lifecycle, including terminal security, data security, application security, network security, and privacy protection. In the meantime, the security technologies used by Hikvision are all in compliance with local applicable laws and safety regulations. These security measures could enhance product's cyber security defense capability and protect your devices as well as your data from malicious cyber attacks.

- Dedicated large scale AI model for perimeter protection
- Captures a large area and great details at the same time
- High quality imaging with 6 MP resolution for panoramic channel and 8 MP resolution for PTZ channel
- 24/7 colorful imaging and excellent low-light performance with DarkFighter technology
- Bullet channel tilt adjustable from 12° to 24°
- Secures an expansive area with 42 × optical zoom and 16 × digital zoom
- Expansive night view with up to 60 m hybrid light distance and 400 m IR distance
- Supports deep learning functions
- Water and dust resistant (IP67) and vandal resistant (IK10) excluding glass window
- Smart Pan-Tilt Correction

▪ Specification

Camera	
Image Sensor	[Bullet channel] 1/2.5" Progressive Scan CMOS, [PTZ channel] 1/1.8" Progressive Scan CMOS
Min. Illumination	[Bullet channel] Color: 0.0005 Lux @ (F1.0, AGC ON), B/W: 0.0001 Lux @ (F1.0, AGC ON), 0 Lux with light, [PTZ channel] Color: 0.0003 Lux @ (F1.2, AGC ON), B/W: 0.0001 Lux @ (F1.2, AGC ON), 0 lux with IR
Shutter Speed	1/25 s to 1/30000 s
Slow Shutter	Yes
Day & Night	[Bullet channel] Color, [PTZ channel] IR cut filter
Zoom	[PTZ channel] 42 × optical, 16 × digital
Max. Resolution	[Bullet channel] 3680 × 1656, [PTZ channel] 3840 × 2160
Lens	
Zoom Speed	[Bullet channel] No, [PTZ channel] approx. 1 s
Focus	Auto,semi-auto,manual
Focal Length	[Bullet channel] 2.8 mm, [PTZ channel] 6 to 252 mm
FOV	[Bullet channel] horizontal field of view: 190° ± 10°, vertical field of view: 80° ±10°, diagonal field of view: 198° ±10°, [PTZ channel] horizontal field of view: 59.1° to 2°, vertical field of view: 34.2° to 1.1°, diagonal field of view: 67.1° to 2.3°
Aperture	[Bullet channel] F1.0, [PTZ channel] F1.2
Illuminator	
Supplement Light Type	[Bullet channel] White Light and IR, [PTZ channel] IR
Supplement Light Range	[Bullet channel] White Light: up to 40 m, IR: up to 60 m [PTZ channel] IR: up to 400 m
Smart Supplement Light	Yes
PTZ	
Movement Range (Pan)	[PTZ channel] 0° to 360°
Movement Range (Tilt)	[Bullet channel] 12° to 24°, [PTZ channel] -20° to 90°
Pan Speed	[PTZ channel] pan speed: configurable from 0.1° to 160°/s, preset speed: 240°/s
Tilt Speed	[Bullet channel] tilt speed configurable,[PTZ channel] tilt speed: configurable from 0.1° to 120°/s, preset speed 200°/s
Proportional Pan	[Bullet channel] No, [PTZ channel] Yes
Presets	300
Patrol Scan	8 patrols, up to 32 presets for each patrol
Pattern Scan	4 pattern scans, record time over 10 minutes for each scan
Power-off Memory	Yes
Park Action	Preset,pattern scan,patrol scan,auto scan,tilt scan,random scan,frame scan,panorama scan
3D Positioning	Yes
PTZ Status Display	Yes
Preset Freezing	Yes
Scheduled Task	Preset,pattern scan,patrol scan,auto scan,tilt scan,random scan,frame scan,panorama scan,dome reboot,dome adjust,aux output

Video	
Main Stream	[Bullet channel] 50 Hz: 25 fps (3680 × 1656 , 3632 × 1632), 60 Hz: 30 fps (3680 × 1656 , 3632 × 1632) [PTZ channel] 50 Hz: 50 fps (3840 × 2160, 2688 × 1520), 100 fps (1920 × 1080, 1280 × 960, 1280 × 720), 60 Hz: 60 fps (3840 × 2160, 2688 × 1520), 120 fps (1920 × 1080, 1280 × 960, 1280 × 720) *High frame rate is supported under monitoring mode only.
Sub-Stream	[Bullet channel] 50 Hz: 25 fps (1200 × 536、960x432), 60 Hz: 30 fps (1200 × 536、960x432) , [PTZ channel] 50 Hz: 25 fps (704 × 576 ,640 × 480 ,352 × 288), 60 Hz: 30 fps (704 × 480,640 × 480,352 × 240),
Third Stream	[Bullet channel] No,[PTZ channel] 50 Hz: 25 fps (1920 × 1080, 1280 × 960, 1280 × 720, 704 × 576, 640 × 480, 352 × 288), 60 Hz: 30 fps (1920 × 1080, 1280 × 960, 1280 × 720, 704 × 480, 640 × 480, 352 × 240)
Video Compression	Main stream: H.265+/H.265/H.264+/H.264, Sub-stream: H.265/H.264/MJPEG, Third stream: H.265/H.264/MJPEG
Video Bit Rate	32 Kbps to 16 Mbps
H.264 Type	Baseline profile,Main profile,High profile
H.265 Type	Main profile
Scalable Video Coding (SVC)	H.264 and H.265 encoding
Region of Interest (ROI)	8 fixed regions for each stream
Audio	
Audio Compression	G.711,MP2L2,AAC-LC,MP3,G.726,G.722.1,PCM
Audio Bit Rate	64 Kbps (G.711ulaw/G.711alaw),32 to 192 Kbps (MP2L2),16 to 64Kbps (AAC-LC),8 to 320 Kbps (MP3),16 Kbps (G.726),16 Kbps (G.722.1)
Audio Sampling Rate	8 kHz,16 kHz,32 kHz,48 kHz
Environment Noise Filtering	Yes
Network	
API	ISAPI,SDK,ISUP,ISUP, ISAPI, Hikvision SDK, Open Network Video Interface (Profile S, Profile G, Profile T, Profile M) , OTAP
Security	Password protection,complicated password,watermark,control timeout settings,HTTPS encryption,IP address filter,802.1X authentication (EAP-TLS, EAP-LEAP, EAP-MD5),basic and digest authentication for HTTP/HTTPS,WSSE and digest authentication for Open Network Video Interface, RTP/RTSP over HTTPS,security audit log,host authentication (MAC address),TLS 1.3,TLS 1.2
Network Storage	NAS (NFS, SMB/CIFS),auto network replenishment (ANR)
Protocols	IPv4/IPv6,HTTP,HTTPS,802.1X,QoS,SMTP,UPnP,SNMP,DNS,DDNS,NTP,RTSP,RTCP,RTP,TCP/IP,UDP,IGMP,ICMP,DHCP,PPPoE,Bonjour,FTP
Simultaneous Live View	Up to 20 channels
User/Host	Up to 32 users. 3 user levels: administrator, operator, and user
Client	iVMS-4200,HikCentral Pro,Hik-Connect
Web Browser	Plug-in free live view: Chrome 57.0+, Firefox 52.0+, Edge 89+, Safari 11+ ; Local service: Chrome 57.0+, Firefox 52.0+, Edge 89+

AI Open Platform	
Model Specification	Model type for AI Open Platform trained algorithm loading: high-performance model (small model), enhanced high-performance model (hybrid small-large model), and ultra-high-precision model (large model).↵ Supports 4 model packages, each capable of detecting 16 target types and classifying 1 target. The device runs up to 2 small models or 1 large model at the same time.
Task Type	Algorithm type for AI Open Platform high-performance model (small model): Detection, Classification, Mixed (maximum: 1 detection + 7 classifications), OCR, Segmentation, Image Comparison. Supports simultaneous independent operation of 2 models. Supports video analysis and image analysis. Algorithm type for AI Open Platform enhanced high-performance model (hybrid small-large model): Detection, Classification, Mixed (maximum: 1 detection + 7 classifications). Supports video real-time analysis. Algorithm type for AI Open Platform ultra-high-precision model (large model): Detection, Classification, Mixed (maximum: 1 detection + 7 classifications), OCR. Supports image scheduled analysis and I/O-triggered analysis. Supports algorithm orchestration for comparison. Supports importing user-defined orchestration packages (3 operator nodes, 5 logic nodes) for scenario-based application deployment.
Event Type	Region target exception status detection, region target number counting, area overlap ratio counting, area overlap ratio exception detection, area status change detection, line crossing target detection, line crossing target counting, OCR trigger, full analysis rule, combined rule
Rule Setting	Up to 16 rules. Supports moving target filtering and shield region setting.
Image	
Day/Night Switch	Day,night,auto,schedule
Image Enhancement	3D DNR,HLC,BLC,EIS
Wide Dynamic Range (WDR)	[Bullet channel] 120 dB, [PTZ channel] 140 dB
Defog	Digital defog
Image Stabilization	EIS (Built-in gyroscope to improve EIS performance)
Regional Exposure	Yes
Regional Focus	[Bullet channel] No, [PTZ channel] Yes
Image Settings	Saturation, brightness, contrast, sharpness, gain, and white balance adjustable by client software or web browser
Image Parameters Switch	Yes
Privacy Mask	[Bullet channel] No, [PTZ channel] 24 programmable polygon privacy masks; mask color or mosaic configurable
SNR	≥ 52 dB
Supplement Detection	
Satellite Positioning	No
Gyroscope	Yes
Compass	No
Interface	
On-board Storage	Built-in memory card slot, support microSD/microSDHC/microSDXC card, up to 1TB .
Ethernet Interface	1 RJ45 100M self-adaptive Ethernet port
Alarm	7 input(s), 2 output(s)

Audio	1 input (line in), max. input amplitude: 2-2.4 vpp, input impedance: 1 KΩ ± 10%, 1 output (line out), line level, output impedance: 600 Ω
RS-485	1 RS-485 (Half duplex, HIKVISION, Pelco-P, Pelco-D, self-adaptive)
Reset	Yes
Large Models	
Perimeter Protection	Line crossing, intrusion, region entrance, region exiting Support alarm triggering by specified target types (human and vehicle) Support combined event alarm triggering Dedicated large scale AI model for perimeter protection, reduce false alarms by 90% compared to conventional AI cameras VCA range: [Bullet channel] up to 40m(nighttime)/60m(daytime), [PTZ channel] Wide: up to 70m(nighttime)/100m(daytime), Tele: up to 400m *Result based on standard setup and test environment
Scenario-Aware Object Detection	This function is based on the large model technology combined with image classification detection. It can automatically detect and identify scene categories in the detection area, including road, intersection, toll station, petrol station, open-air square, vehicle entrance and exit, and person entrance and exit, etc. The PTZ camera will rotate 360° to capture and label the scenes.For automatically recognize the scene information of captured image.- Real-time detection mode: the PTZ camera completes the full-scene capture, detection, and recognition output within 10 minutes in 360°.- Scheduled detection mode: the scheduled time can be set, and pictures can be collected every day or week. The collected pictures will be stored in eMMC, and the detection results will be output at 2 AM by default.The detection results and labels can be uploaded as alarms, and the alarm should include the camera IP address, port No., channel No., capture time, upload time, picture, PTZ coordinates, label ID, label name, and OCR information, as well as the coordinates of each OCR.
Event	
Basic Event	[PTZ channel & bullet channel] alarm input and output, exception,[PTZ channel] video tampering alarm
Smart Event	unattended baggage detection,object removal detection,people gathering detection,loitering detection,fast moving detection,parking detection
Linkage	[PTZ channel] Upload to FTP/NAS/memory card, notify surveillance center, send email, trigger alarm output, trigger recording, audible warning, white light flashing, and PTZ actions (such as preset, patrol scan, pattern scan), [Bullet channel] Upload to FTP/NAS/memory card, notify surveillance center, send email, trigger alarm output, and trigger recording
Deep Learning Function	
Multi-Target-Type Detection	[PTZ channel] Supports simultaneous detection and capture of human body, face and vehicle
Face Capture	Detects up to 30 faces simultaneously, Uploads face with background and closed-up face pictures
Face Comparison	Up to 10 face libraries. 30000 faces for each library. 150000 faces in total

Road Traffic and Vehicle Detection	Smart Function: Support license plate recognition of vehicles and motorcycles (only in checkpoint scenario) Support vehicle attribute detection, including vehicle type, color, brand, driving direction, etc. Support vehicle and non-vehicle counting Blocklist and allowlist: up to 10,000 records LPR Countries/Regions: 4 areas (Europe, Middle East, Asia-Pacific, Africa) and more than 124 countries/regions Accuracy (Under recommended installation and lighting conditions): License plate recognition rate ≥98% Capture rate ≥99% Driving direction accuracy rate ≥98% Vehicle Capture Speed: Front installation in checkpoint scenario: up to 120 km/h Side installation: up to 80 km/h Capture Mode: License Plate and Vehicle Mode, Vehicle Priority Mode
People Density	Supports detecting the level of people density in the configured area,[PTZ channel]: no, [Panoramic channel]: yes
Linkage and Tracking	
Smart Tracking	Manual tracking, auto-tracking 3.0
Smart Linkage	Manual tracking, auto tracking, tracking takeover, linked tracking capture
Object Tracking	Support person arming. When the device detects the armed face or human body in the monitoring scene, it triggers alarms, and tracks and captures the target. During the tracking, the target location and other related information are uploaded.Support vehicle arming. When the device detects the armed vehicles in the monitoring scene, it triggers alarms, and tracks and captures the target. During the tracking, the target location and other related information are uploaded.
General	
Power	36 VDC± 25%, max. 90 W (Max. 65 W, including max. 15 W for IR and max. 8 W for heater), PoE 802.3bt, type4, class8, max. 90W (Max. 65W, including max. 15W for IR and max. 8 W for heater)
General Function	mirror,password protection
Operating Condition	-40 °C to 70 °C (-40 °F to 158 °F). Humidity 95% or less (non-condensing)
Wiper	Yes
Demist	Yes
Material	ADC12
Dimension	Ø260 mm × 382.9 mm (Ø10.24" × 15.07")
Weight	Approx. 7.8 kg (17.196 lb.)
Language	33 languages: English, Russian, Estonian, Bulgarian, Hungarian, Greek, German, Italian, Czech, Slovak, French, Polish, Dutch, Portuguese, Spanish, Romanian, Danish, Swedish, Norwegian, Finnish, Croatian, Slovenian, Serbian, Turkish, Korean, Traditional Chinese, Thai, Vietnamese, Japanese, Latvian, Lithuanian, Portuguese (Brazil), Ukrainian
Approval	
EMC	CE-EMC (EN 50130-4:2011+A1:2014, EN 55032:2015+A11:2020+A1:2020, EN 61000-3-3:2013+A1:2019+A2:2021, EN IEC 61000-3-2:2019+A1:2021)

Safety	CE-LVD (EN 62368-1:2014 + A11:2017),CB (IEC 62368-1:2014)
Environment	CE-RoHS (2011/65/EU and its amendment (EU)2015/863)
Protection	IP67 (IEC 60529:1989+AMD1:1999+AMD2:2013),IK10 (IEC 62262:2002, excluding glass window),Lightning Protection,Surge Protection and Voltage Transient Protection,±6kV Line to Gnd, ±3kV Line to Line
Anti-Corrosion Protection	Model with -Y: NEMA 4X (NEMA 250-2018), Model without -Y: No

▪ DORI

The DORI (detect, observe, recognize, identify) distance gives the general idea of the camera ability to distinguish persons or objects within its field of view. It is calculated based on the camera sensor specification and the criteria given by EN 62676-4: 2015.

DORI	Detect	Observe	Recognize	Identify
Definition	25 px/m	63 px/m	125 px/m	250 px/m
[Bullet channel] Distance	38.6m	15.3m	7.7m	3.9m
[PTZ channel] Distance (Tele)	3475.9m	1379.3m	695.2m	347.6m

▪ Available Model

DS-2SF7C842MXG2/LM-ELY/26(F0)

▪ Dimension

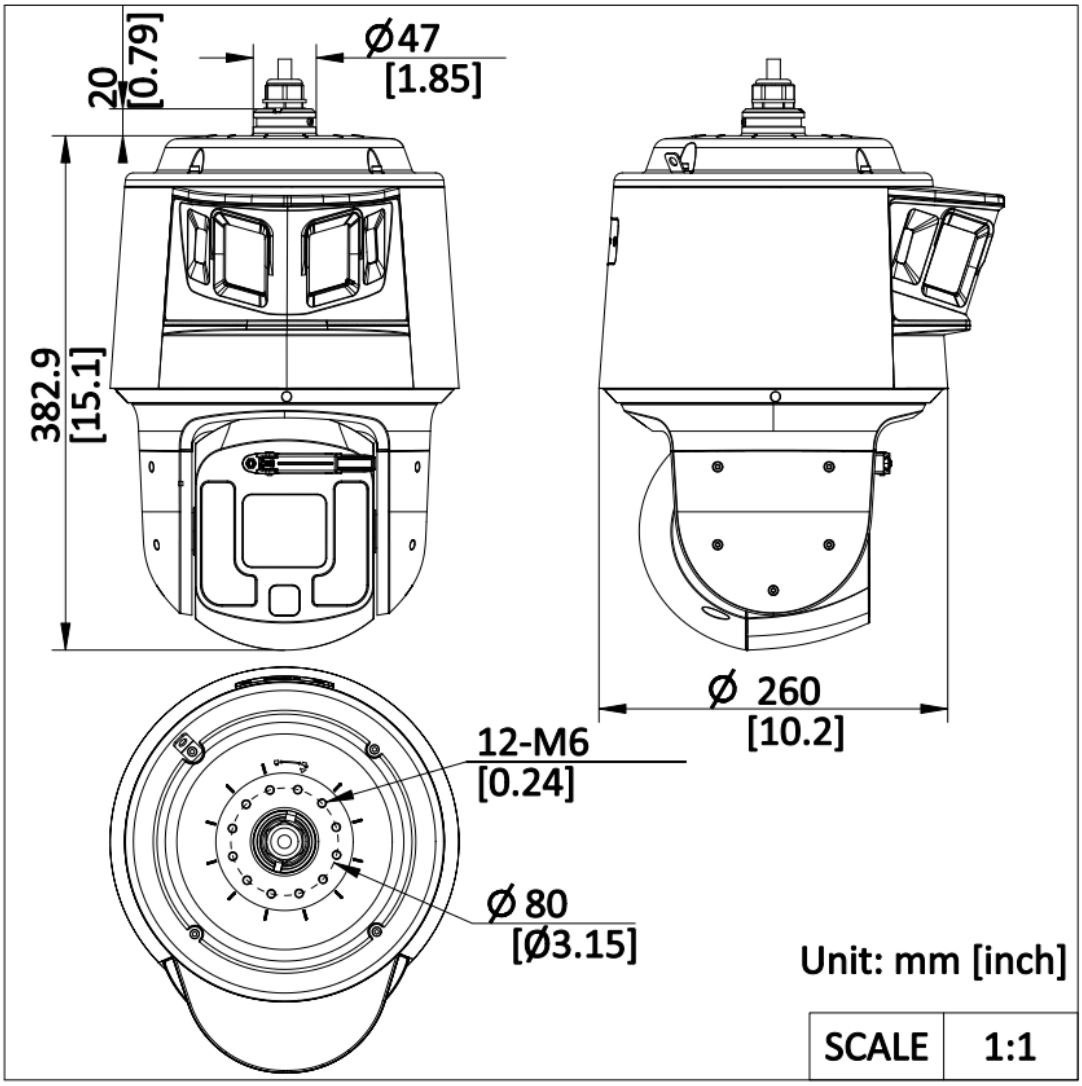

▪ Accessory

▪ Optional

DS-1684ZJ-P-Y	DS-1674ZJ-P-Y	DS-4612ZJ-PAAC	DS-4660ZJ-PSLY	DS-1673ZJ-P-Y
			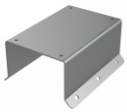	
DS-4650ZJ-PSLY	DS-4603ZJ-PAAC	DS-1276ZJ-P-Y		

▪ Installation Methods

Vertical Pole Mounting DS-1684ZJ-P-Y+DS-4603ZJ-PAAC	Vertical Pole Mounting DS-4650ZJ-PSLY+DS-4603ZJ-PAAC+DS-1674ZJ-P-Y	Junction Box DS-1674ZJ-P-Y+DS-4603ZJ-PAAC	Pendant Mounting DS-4612ZJ-PAAC	Corner Mounting DS-4660ZJ-PSLY+DS-4603ZJ-PAAC+DS-1674ZJ-P-Y
	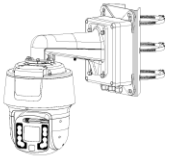			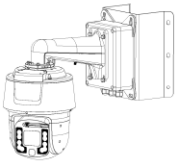

Corner Mounting DS-1276ZJ-P-Y+DS-4603ZJ-PAAC	Horizontal Pole Mounting DS-1673ZJ-P-Y+DS-4612ZJ-PAAC	Wall Mounting DS-4603ZJ-PAAC
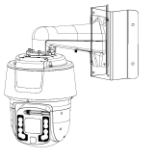		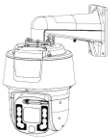

See Far, Go Further

www.hikvision.com
support@hikvision.com

© Hangzhou Hikvision Digital Technology Co., Ltd. Unless otherwise agreed, Hikvision makes no warranties, express or implied. We reserve the right to introduce modifications without notice.