iDS-2CD7A86G2/P-IZHS(Y)/4G
8MP 4G DeepinView ANPR Moto Varifocal Bullet Camera

Hikvision has been dedicated to develop products with security since established.
Hikvision always follows security by design principle and has adopted many methods of security technologies into our product development lifecycle, including terminal security, data security, application security, network security, and privacy protection. In the meantime, the security technologies used by Hikvision are all in compliance with local applicable laws and safety regulations. These security measures could enhance product's cyber security protection capability and protect your devices as well as your data from malicious cyber attacks.

- High quality imaging with 8 MP resolution
- Excellent low-light performance via DarkFighter 2.0 technology
- Clear imaging against strong back light due to 140 dB AWDR technology
- Efficient H.265+ compression technology to save bandwidth and storage
- 5 streams to meet a wide variety of applications
- Water and dust resistant (IP67), vandal proof (IK10) and corrosion resistant (NEMA 4X, optional)
- High frame rate, up to 8MP@60fps and 2MP@120fps
- Built-in heater to ensure clear image under rainy or snowy weather
- Built-in G-sensor for vibration detection
- Built-in power meter for historical power statistics
- License plate recognition and vehicle attribution recognition

▪ Function

Perimeter Protection

With embedded deep learning based target detection and classification algorithms, the camera carries out the duty of perimeter protection, monitoring the actions of line crossing, intrusion, region entrance, and region exiting. The algorithms greatly filter out the mistaken alarm caused by the interference of leafs, lights, animal, flag, etc.

Road Traffic and Vehicle Detection

With embedded deep learning based license plate capture and recognition algorithms, the camera alone can achieve plate capture and recognition. The algorithm enjoys the high recognition accuracy of common plates and complex-structured plates, which is a great step forward comparing to traditional algorithms. Blocklist and allowlist are available for plate categorization and separate alarm triggering.

▪ Specification

Camera	
Image Sensor	1/1.8" Progressive Scan CMOS
Max. Resolution	3840 × 2160
Min. Illumination	Color: 0.0008 Lux @ (F1.2, AGC ON),B/W: 0.0001 Lux @ (F1.2, AGC ON),B/W: 0 Lux with IR
Shutter Time	1 s to 1/100,000 s
Day & Night	IR cut filter, Blue glass module (less ghost phenomenon)
Lens	
Focal Length & FOV	2.8 to 12 mm, horizontal FOV 112.3° to 41.2°, vertical FOV 58.1° to 23.1°, diagonal FOV 137.4° to 47.3° 8 to 32 mm, horizontal FOV 41.8° to 15°, vertical FOV 22.9° to 8.5°, diagonal FOV 48.7° to 17.1° 10 to 50 mm, horizontal FOV 40.8° to 9.1°, vertical FOV 22.7° to 5.2°, diagonal FOV 47.1° to 10.4°
Focus	Auto,Semi-auto,Manual
Iris Type	P-iris
Aperture	2.8 to 12 mm: F1.38 to F2.53, 8 to 32 mm: F1.7 to F1.73, 10 to 50 mm: F1.38-F1.56
Pixel Density	
OODPCVS	Wide: 2.8 to 12 mm: Overview: 108.8 m, Outline: 54.4 m, Discern: 27.2 m, Perceive: 17.4 m, Characterize: 8.7 m, Validate: 4.4 m, Scrutinize: 1.5 m 8 to 32 mm: Overview: 272.5 m, Outline: 136.3 m, Discern: 68.1 m, Perceive: 43.6 m, Characterize: 21.8 m, Validate: 10.9 m, Scrutinize: 3.6 m 10 to 50 mm: Overview: 272.5 m, Outline: 136.3 m, Discern: 68.1 m, Perceive: 43.6 m, Characterize: 21.8 m, Validate: 10.9 m, Scrutinize: 3.6 m Tele: 2.8 to 12 mm: Overview: 270.0 m, Outline: 135.0 m, Discern: 67.5 m, Perceive: 43.2 m, Characterize: 21.6 m, Validate: 10.8m, Scrutinize: 3.6 m 8 to 32 mm: Overview: 725.0 m, Outline: 362.5 m, Discern: 181.3 m, Perceive: 116.0 m, Characterize: 58.0 m, Validate: 29.0 m, Scrutinize: 9.7 m 10 to 50 mm: Overview: 1152.5 m, Outline: 576.3 m, Discern: 288.1 m, Perceive: 184.4 m, Characterize: 92.2 m, Validate: 46.1 m, Scrutinize: 15.4 m The OODPCVS values are calculated using pixel densities for different use cases as recommended by the IEC/EN 62676-4: 2025 standard. IEC 62676-4:2025 describes the planning, design, installation, testing, commissioning, and maintaining of video surveillance systems (VSS) comprising image capture device(s), interconnection(s) and image handling device(s), for use in security applications within private or public spaces.
Illuminator	
Supplement Light Type	IR

Supplement Light Range	2.8 to 12 mm: Monitoring: 60 m; 8 to 32 mm: Monitoring: 100 m; 10 to 50 mm: Monitoring: 100 m
Smart Supplement Light	Yes
IR Wavelength	850 nm
HEOP	
Open Resources	Memory: 150 MB, Smart RAM: 2200 MB, eMMC: 1288 MB
Computing Power	5 TOPS
Open Capability	HEOP 2.0 OpendevSDK
Deep Learning Structure	Caffe,PyTorch,TensorFlow
Programming Language	C,C++
Video	
Main Stream	Monitoring mode: 50 Hz: up to 50 fps (3840 × 2160, 3072 × 1728, 2688 × 1520, 1280 × 720), up to 100 fps (1920 × 1080) 60 Hz: up to 60 fps (3840 × 2160, 3072 × 1728, 2688 × 1520, 1280 × 720), up to 120 fps (1920 × 1080) *High frame rate is supported under monitoring mode only. smart mode: 50 Hz: 25 fps (3840 × 2160, 3072 × 1728, 2688 × 1520, 1920 × 1080, 1280 × 720) 60 Hz: 30 fps (3840 × 2160, 3072 × 1728, 2688 × 1520, 1920 × 1080, 1280 × 720)
Sub-Stream	50 Hz: 25 fps (1280 × 720, 704 × 576, 640 × 480) 60 Hz: 30 fps (1280 × 720, 704 × 480, 640 × 480)
Third Stream	50 Hz: 25 fps (1920 × 1080, 1280 × 720, 704 × 576, 640 × 480) 60 Hz: 30 fps (1920 × 1080, 1280 × 720, 704 × 480, 640 × 480)
Fourth Stream	50 Hz: 25 fps (704 × 576, 640 × 480) 60 Hz: 30 fps (704 × 480, 640 × 480)
Fifth Stream	50 Hz: 25 fps (704 × 576, 640 × 480) 60 Hz: 30 fps (704 × 480, 640 × 480)
Video Compression	Main stream: H.265+/H.265/H.264+/H.264, Sub-stream: H.265/H.264/MJPEG, Third stream: H.265/H.264, Fourth stream: H.265/H.264/MJPEG, Fifth stream: H.265/H.264/MJPEG
Video Bit Rate	32 Kbps to 16 Mbps
H.264 Type	Baseline Profile,Main Profile,High Profile
H.265 Type	Main Profile
Bit Rate Control	CBR,VBR
Scalable Video Coding (SVC)	H.264 and H.265 encoding
Region of Interest (ROI)	4 fixed regions for each stream
Target Cropping	Yes
e-PTZ	Support Patrol and Auto Tracking settings
Guanlan AI Encoding	Yes
Audio	
Audio Type	Mono sound

Audio Compression	G.711/G.722.1/G.726/MP2L2/PCM/MP3/AAC-LC
Audio Bit Rate	64 Kbps (G.711ulaw/G.711alaw)/16 Kbps (G.722.1)/16 Kbps (G.726)/32 to 192 Kbps (MP2L2)/8 to 320 Kbps (MP3)/16 to 64 Kbps (AAC-LC)
Audio Sampling Rate	8 kHz/16 kHz/32 kHz/48 kHz
Environment Noise Filtering	Yes
Network	
Protocols	TCP/IP, ICMP, HTTP, HTTPS, FTP, DHCP, DNS, DDNS, RTP, SRTP, RTSP, RTCP, PPPoE, NTP, UPnP, SMTP, SNMP, IGMP, 802.1X, QoS, IPv4, IPv6, UDP, Bonjour, WebSocket, WebSockets , MQTT/MQTTS, RTMP. Support X.509 authentication , Support802.1xEAP-GTC and MSCHAP V2 ; 802.1xEAP 1.2 supports a maximum 32-bit key.
Simultaneous Live View	Up to 20 channels
API	ISAPI,SDK,ISUP,OTAP,ONVIF (Profile S, Profile G, Profile T, Profile M)
User/Host	Up to 32 users 3 user levels: administrator, operator, and user
Smooth Streaming	Yes
Security	Password protection, complicated password, HTTPS encryption, 802.1X authentication (EAP-TLS, EAP-LEAP, EAP-MD5), watermark, IP address filter, basic and digest authentication for HTTP/HTTPS, WSSE and digest authentication for Open Network Video Interface, RTP/RTSP OVER HTTPS, Control Timeout Settings, Security Audit Log, TLS 1.2, TLS 1.3, TPM 2.0 (FIPS 140-2 level 2), AES128/256
Network Storage	NAS (NFS, SMB/CIFS),Auto Network Replenishment (ANR), Together with high-end Hikvision memory card, memory card encryption and health detection are supported., Cloud Storage
Client	iVMS-4200,Hik-Connect,Hik-Central
Web Browser	Plug-in required live view: IE 10, IE 11, Plug-in free live view: Chrome 57.0+, Firefox 52.0+, Edge 89+, Safari 11+, Local service: Chrome 57.0+, Firefox 52.0+, Edge 89+
Mobile Communication	
Standard	LTE-TDD/LTE-FDD/WCDMA/GSM
Frequency	/LA： LTE-TDD: Band38/40 LTE-FDD: Band1/2/3/4/5/7/8/12/17/28/66 WCDMA: Band1/2/3/4/5/8 GSM: 850/900/1800/1900 MHz other： LTE-TDD: Band38/40/41 LTE-FDD: Band1/3/5/7/8/20/28 WCDMA: Band1/5/8 GSM: 850/900/1800 MHz
SIM Card Type	Nano SIM
Image	
Image Parameters Switch	Yes

Image Settings	Rotate mode,saturation,brightness,contrast,sharpness,white balance,AGC,adjustable by client software or web browser
Day/Night Switch	Day,Night,Auto,Schedule,Alarm Trigger,Video Trigger
Wide Dynamic Range (WDR)	140 dB
Image Enhancement	BLC,HLC,3D DNR,Distortion Correction,Defog
SNR	≥ 52 dB
Privacy Mask	8 programmable polygon privacy masks
Picture Overlay	LOGO picture can be overlaid on video with 128 × 128 24 bit bmp format.
Image Stabilization	EIS
Interface	
Video Output	1 Vp-p Composite Output (75 Ω/CVBS) (Only for debugging)
Ethernet Interface	1 RJ45 10 M/100 M/1000 M self-adaptive Ethernet port
On-Board Storage	Built-in memory card slot, support microSD/microSDHC/microSDXC card, up to 1 TB
Alarm	2 inputs, 2 outputs (max. 24 VDC/24 VAC, 1 A)
Audio	1 input (line in), 3.5 mm connector, three-contact, max. input amplitude: 3.3 Vpp, input impedance: 4.7 KΩ, interface type: non-equilibrium, 1 output (line out), 3.5 mm connector, three-contact, max. output amplitude: 3.3 Vpp, output impedance: 100 Ω, interface type: non-equilibrium, mono sound
RS-485	-Y: 1 RS-485 (Half duplex, HIKVISION, Pelco-P, Pelco-D, self-adaptive)
Reset Key	Yes
Power Output	-Y: 12 VDC, max. 100 mA
Wiegand	-Y: 1 Wiegand (CardID 26bit, SHA-1 26bit, Hik 34bit, NEWG 72 bit)
Event	
Basic Event	Motion detection (support alarm triggering by specified target types (human and vehicle)),video tampering alarm,exception (network disconnected, IP address conflict, illegal login, HDD full, HDD error),glass break detection,scream detection,gunshot and explosion sound detection,crying sound detection
Smart Event	Line crossing detection, intrusion detection, region entrance detection, region exiting detection
Linkage	Upload to FTP/NAS/memory card,notify surveillance center,trigger recording,trigger capture,trigger alarm output,send email,audible warning,HTTP custom alarm
Deep Learning Function	
Perimeter Protection	Line crossing, intrusion, region entrance, region exiting Support alarm triggering by specified target types (human and vehicle) Support combined event alarm triggering
Metadata	Intrusion detection,line crossing detection,region entrance detection,region exiting detection,road traffic

Road Traffic and Vehicle Detection	Smart Function: Support license plate recognition of vehicles and motorcycles (only in checkpoint scenario) Support vehicle attribute detection, including vehicle type, color, brand, driving direction, etc. Support vehicle and non-vehicle counting Blocklist and allowlist: up to 50,000 records LPR Countries/Regions: 4 areas (Europe, Middle East, Asia-Pacific, Africa) and more than 124 countries/regions Accuracy (Under recommended installation and lighting conditions): License plate recognition rate ≥98% Capture rate ≥99% Driving direction accuracy rate ≥98% Vehicle Capture Speed: Front installation in checkpoint scenario: up to 120 km/h Side installation: up to 80 km/h Capture Mode: License Plate and Vehicle Mode, Vehicle Priority Mode Supports license plate recognition in detection area or lane line in the entrance and exit. Supports Reverse License Plate Secondary Detection. If the vehicle is always in the camera view, when it triggers one capture, another capture will be triggered when it backs out of parking lot. Supports JSON files in alarm upload.
Parking Management	Support distant view mode and close view mode Distant view mode: support status detection on up to 40 parking spaces, parking duration detection, and vacant parking space alarm Close view mode: support status detection on up to 4 parking spaces, license plate recognition, parking timeout alarm, and vacant parking space alarm
AcuSeek	Support searching for humans, license plates, vehicles, non-motorized vehicles, and animals and uploading the feature information. This function requires use with AcuSeek NVR/Servers.
Vehicle Event Detection	Supports Parking Detection and Congestion Detection. Supports Vehicle Statistics to count the number of vehicles staying within the detection area. Suppots real-time upload data, and OSD overlay.
General	Supports scheduled-switch of smart applications. Supports enabling 2 smart applications at the same time.
General	
Power	-Y: three-core terminal block, 12 VDC ± 20%, 1.95 A, max. 23.4 W, 24 VAC ± 20%, 1.66 A, max. 23.8 W, Without -Y: 12 VDC ± 20%, 1.91 A, max. 22.9 W, 24 VAC ± 20%, 1.45 A, max. 22.9 W,
Material	Aluminum alloy body

Dimension	With -Y: Ø140 mm × 377.4 mm (Ø5.5" × 14.9"), Without -Y: Ø144.1 mm × 374.7 mm (Ø5.7" × 14.8")
Package Dimension	425 mm × 190 mm × 180 mm (16.7" × 7.5" × 7.1")
Weight	Approx. 2330 g (5.14 lb.)
With Package Weight	Approx. 3575 g (7.88 lb.)
Storage Conditions	-40 °C to 65 °C (-40 °F to 149 °F). Humidity 95% or less (non-condensing)
Startup and Operating Conditions	-40 °C to 65 °C (-40 °F to 149 °F). Humidity 95% or less (non-condensing)
Language	33 languages: English, Russian, Estonian, Bulgarian, Hungarian, Greek, German, Italian, Czech, Slovak, French, Polish, Dutch, Portuguese, Spanish, Romanian, Danish, Swedish, Norwegian, Finnish, Croatian, Slovenian, Serbian, Turkish, Korean, Traditional Chinese, Thai, Vietnamese, Japanese, Latvian, Lithuanian, Portuguese (Brazil), Ukrainian
General Function	Heartbeat,anti-banding,one-key reset,mirror,password protection,flash log
Heater	Yes
Demist	Yes
Device Management	Supports adding alarm box (DS-FM2466) in the LAN to expand 6 additional input and 6 output alarm interfaces. Supports adding network microphone and speaker.
Integrated Connector Panel	-Y: No
Approval	
EMC	CE-EMC: EN 55032:2015+A1:2020, EN 50130-4:2011+A1:2014, EN IEC 61000-3-2:2019+A1:2021, EN 61000-3-3:2013+A1:2019+A2:2021, RCM: AS/NZS CISPR 32: 2015, IC: ICES-003: Issue 7, KC: KN32: 2015, KN35: 2015
Safety	CB: IEC 62368-1: 2014+A11, CE-LVD: EN 62368-1: 2014/A11: 2017, BIS: IS 13252 (Part 1): 2010/IEC 60950-1: 2005, LOA: IEC/EN 60950-1
Environment	CE-RoHS: 2011/65/EU, WEEE: 2012/19/EU, Reach: Regulation (EC) No 1907/2006
Protection	IP67: IEC 60529-2013,IK10: IEC 62262:2002
Anti-Corrosion Protection	-Y: NEMA 4X (NEMA 250-2018)
Automotive and Railway	-Y:EN50121-4
Other	PVC FREE
Cyber Security	IEC62443-4-1 ML2 EUCC CC: EAL3

▪ Typical Application

Hikvision products are classified into three levels according to their anti-corrosion performance. Refer to the following description to choose for your using environment.

With -Y model: This model has MODERATE PROTECTION.
Without -Y model: This model has NO SPECIFIC PROTECTION.

Level	Description
Top-level protection	Hikvision products at this level are equipped for use in

	areas where professional anti-corrosion protection is a must. Typical application scenarios include coastlines, docks, chemical plants, and more.
Moderate protection	Hikvision products at this level are equipped for use in areas with moderate anti-corrosion demands. Typical application scenarios include coastal areas about 2 kilometers (1.24 miles) away from coastlines, as well as areas affected by acid rain.
No specific protection	Hikvision products at this level are equipped for use in areas where no specific anti-corrosion protection is needed.

▪ Installation Recommendation

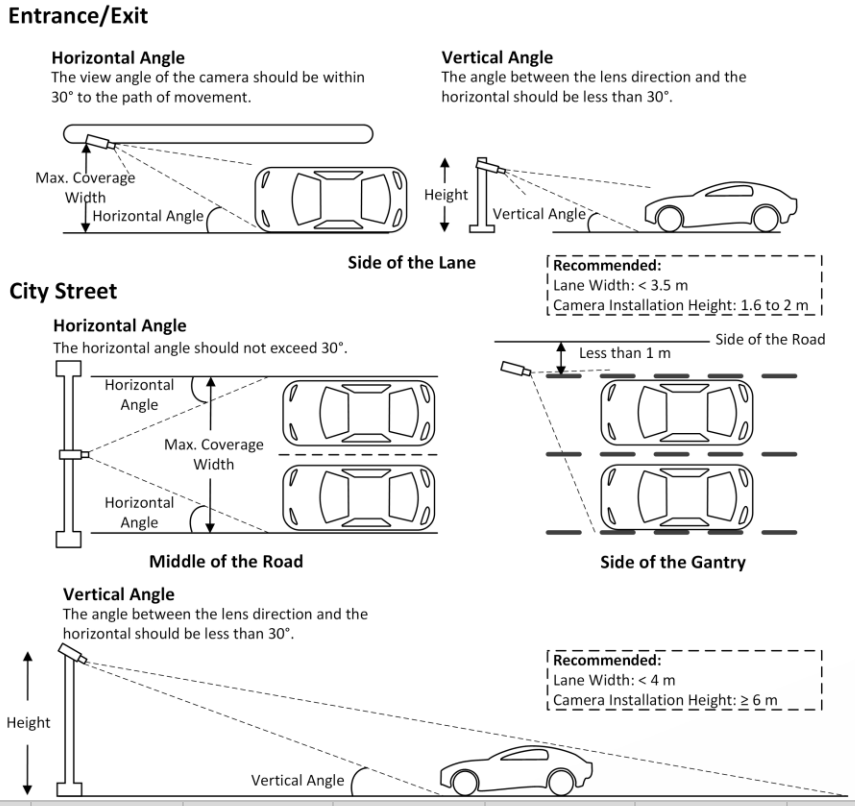

Camera Position	Lens	Height (m)	Suggested Vertical Angle	Suggested Trigger Distance (m)	Max. Coverage Width	Max. Horizontal Angle	Vertical Angle Range	Capture Range (m)
Side of the Lane	2.8 to 12 mm	1.5	20°	4	4.5	30°	15° to 30°	2.5 to 5.5
Side of the Lane	2.8 to 12 mm	2	20°	5.5	4.5	30°	15° to 30°	3.5 to 7.5
Side of the Lane	2.8 to 12 mm	2.5	20°	6.5	4.5	30°	15° to 30°	4.5 to 9
Side of the Lane	8 to 32 mm	3	20°	8	6	30°	15° to 30°	5 to 11
Side of the Lane	8 to 32 mm	4	20°	11	6	30°	15° to 30°	6 to 14

Side of the Lane	8 to 32 mm	5	20°	13.5	6	30°	15° to 30°	8.5 to 18
Side of the Lane	8 to 32 mm	6	20°	16.5	6	30°	15° to 30°	10 to 22
Middle of the Road	8 to 32 mm	3	20°	8	12	30°	15° to 30°	5 to 11
Middle of the Road	8 to 32 mm	4	20°	11	12	30°	15° to 30°	6 to 14
Middle of the Road	8 to 32 mm	5	20°	13.5	12	30°	15° to 30°	8.5 to 18
Middle of the Road	8 to 32 mm	6	20°	16.5	12	30°	15° to 30°	10 to 22

**Note: The installation diagram is for reference only. The actual scenario and appearance may vary.*

▪ Dimension

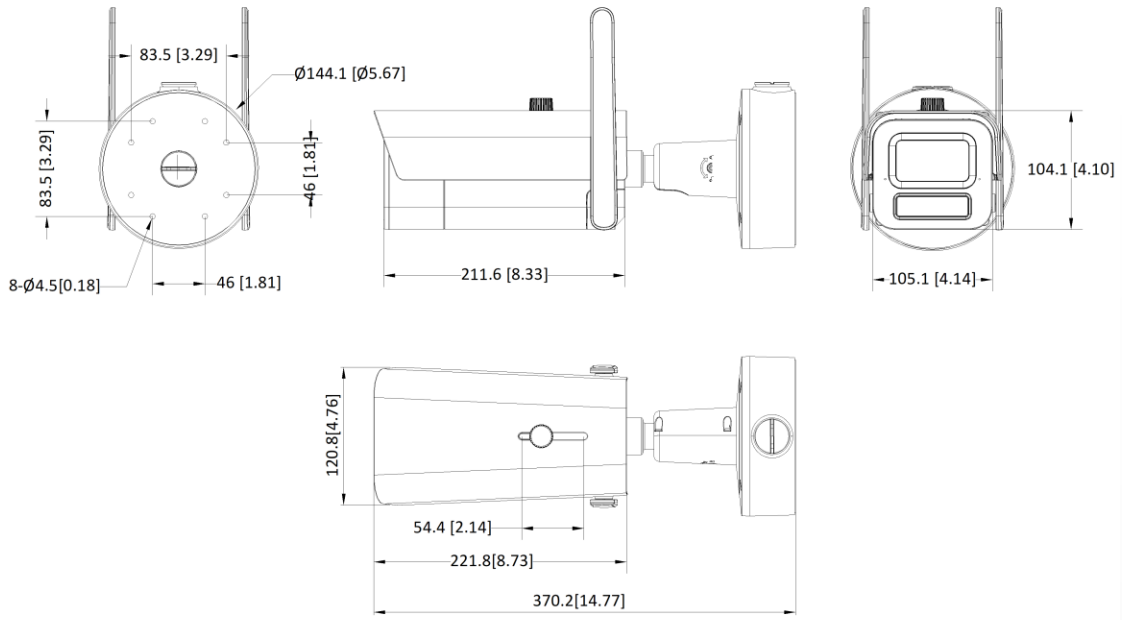

Unit: mm [inch]

SCALE	1:1

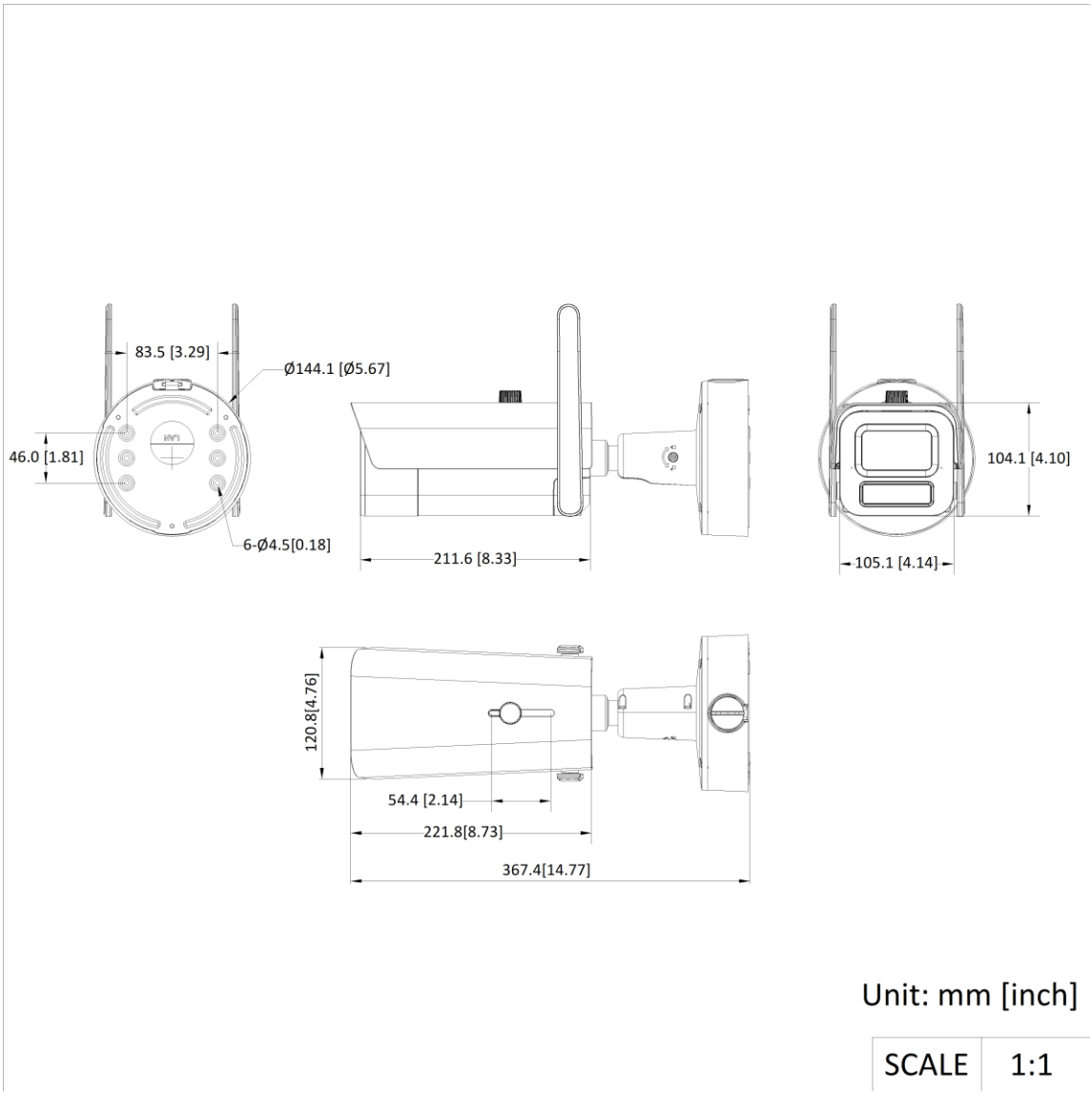

▪ Accessory

▪ Optional

DS-1275ZJ-S-SUS	DS-1475ZJ-SUS	DS-1475ZJ-Y	DS-1476ZJ-SUS	DS-1476ZJ-Y

▪ Installation Methods

Vertical Pole Mounting DS-1275ZJ-S-SUS	Vertical Pole Mounting DS-1475ZJ-SUS	Vertical Pole Mounting DS-1475ZJ-Y	Corner Mounting DS-1476ZJ-SUS	Corner Mounting DS-1476ZJ-Y

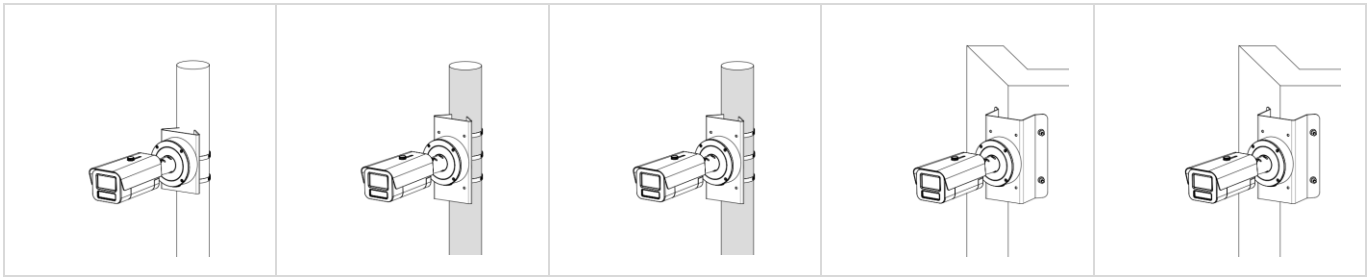

See Far, Go Further

www.hikvision.com
support@hikvision.com

© Hangzhou Hikvision Digital Technology Co., Ltd. Unless otherwise agreed, Hikvision makes no warranties, express or implied. We reserve the right to introduce modifications without notice.