DS-2CFS04/4G/LA
4MP 24/7 Solar 4G Camera





Hikvision Solar Camera supports AOV mode, ultra-low power consumption, 24/7 video recording. The package contains solar panel and lithium battery, so it requires NO network or power cables. It is ideal for outdoor HD surveillance of small businesses and private properties, as well as close-range surveillance of roads, parks, estates, farms, plantations, construction sites, etc.

- Support AOV Mode: 24/7 video recording
- 8 W solar panel and 9000 mAh battery
- Support 4G LTE data transmission
- Smart Hybrid Light: 30 m white light and IR
- Motion Detection 2.0: Support person and vehicle detection
- Built-in microphone and speaker, support two-way audio
- Water and dust resistant (IP66)

▪ Specification

Camera	
Image Sensor	1/3" Progressive Scan CMOS
Max. Resolution	2560 × 1440
Min. Illumination	Color: 0.005 Lux @ (F1.6, AGC ON)
Shutter Time	1/3 s to 1/100,000 s
Day & Night	IR cut filter
Angle Adjustment	Pan: 0° to 360°,tilt: 0° to 180°,rotate: 0° to 360°
Lens	
Focal Length & FOV	2.8 mm, horizontal FOV 98.5°, vertical FOV 53.1°, diagonal FOV 115.9° 4 mm, horizontal FOV 78.3°, vertical FOV 42.8°, diagonal FOV 91.2
Lens Type	Fixed focal lens, 2.8 and 4 mm optional
Aperture	F1.6
Lens Mount	M12
Iris Type	Fixed
Depth of Field	2.8 mm: 1.4 m to ∞ 4 mm: 1.4 m to ∞
Pixel Density	
DORI	Fixed lens: 2.8 mm, D: 63.4 m, O: 25.2 m, R: 12.7 m, I: 6.3 m 4 mm, D: 78.0 m, O: 31 m, R: 15.6 m, I: 7.8 m
Illuminator	
Supplement Light Type	IR,White Light
Supplement Light Range	Up to 30 m
IR Wavelength	850 nm
Smart Supplement Light	Yes
Video	
Main Stream	50 Hz: 12.5 fps (2560 x 1440, 1920 × 1080, 1280 × 720) 60 Hz: 15 fps (2560 x 1440, 1920 × 1080, 1280 × 720)
Video Compression	Main stream: H.265
Video Bit Rate	32 Kbps to 8 Mbps
H.265 Type	Main Profile
Bit Rate Control	CBR,VBR
Audio	
Audio Compression	G.711ulaw
Audio Bit Rate	64 Kbps(G.711ulaw/G.711alaw)
Audio Sampling Rate	8 kHz/16 kHz
Environment Noise Filtering	Yes
Network	
Simultaneous Live View	Up to 6 channels
API	ISAPI,SDK
User/Host	Up to 32 users 3 user levels: administrator, operator, and user
Client	Hik-Connect
Mobile Communication	
Standard	LTE-TDD

Frequency	EU:LTE-FDD: B1/3/5/7/8/20/28 LA:LTE-FDD: B2/3/4/5/7/8/28/66
Uplink and Downlink Data Rate	Cat 1, uplink: 5.1 Mbps, downlink: 10.3 Mbps
SIM Card Type	Nano SIM
Image	
Image Settings	brightness,contrast,white balance,saturation,sharpness
Day/Night Switch	Day,Night,Auto,Schedule
Image Enhancement	BLC,HLC,3D DNR
Wide Dynamic Range (WDR)	Digital WDR
Interface	
On-Board Storage	Built-in memory card slot, support microSD/microSDHC/microSDXC card, up to 512 GB
Reset Key	Yes
Built-in Microphone	Yes,1 built-in microphone
Built-in Speaker	Yes, 1 built-in speaker
Event	
Basic Event	Motion detection (support alarm triggering by specified target types (human and vehicle))
Linkage	Notify surveillance center,trigger recording,trigger capture,audible warning,upload to memory card
General	
Material	Plastic
Dimension	Ø81.6 mm × 221.3 mm (Ø3.21" × 8.71")
Package Dimension	320 mm × 228 mm × 148 mm (12.60" × 8.98" × 5.83")
Weight	Approx. 480 g (1.06 lb.)
With Package Weight	Approx. 1540 g (3.40 lb.)
Startup and Operating Conditions	0 °C to 50 °C (32 °F to 122 °F). Humidity 95% or less (non-condensing)
Storage Conditions	-20 °C to 25 °C (-4 °F to 77 °F). Humidity 70% or less (non-condensing)
General Function	Mirror, flash log
Flashing Light	Yes
Battery	
Battery Type	Lithium
Capacity	9000 mAh (3.7 V)
Max. Charging Voltage	8.4 V
Operating Temperature	Charging: 0°C to 45°C (32°F to 113°F) Discharging: -20°C to 55°C (-4°F to 131°F)
Battery Voltage	6 V to 8.4 V
Cycle Lifetime	Cap(800th)≥80%
Approval	
RF	CE-RED: EN 301489-1 V2.1.1(BT or 2.4G); EN 301489-17 V3.1.1(BT or 2.4G); EN 300328 V2.1.1(BT or 2.4G); EN 62311:2008(BT or 2.4G)
EMC	CE-EMC: EN 55032:2015+A1:2020, EN 50130-4:2011+A1:2014, EN IEC 61000-3-2:2019+A1:2021, EN 61000-3-3:2013+A1:2019+A2:2021, EN 50121-4: 2016+A1:2019
Safety	CB: IEC 62368-1:2014+A11, CE-LVD: EN 62368-1:2014/A11:2017

Environment	CE-RoHS: 2011/65/EU, WEEE: 2012/19/EU, Reach: Regulation (EC) No 1907/2006
Protection	IP66: IEC 60529-2013
Solar Power	
Solar Panel Type	Monocrystalline silicon solar panel
Power Consumption	8 W
Solar Panel Dimensions & Weight	Dimensions: 263.8 mm × 171.7 mm × 18.5 mm (10.39" × 6.76" × 0.73") Weight: 450 g (0.99 lb.)
Working Temperature	-40 °C to 85 °C (-40 °F to 185 °F)
Protection	IP65

**Pro Solar-powered Security Camera Setup*

▪ Typical Application

Hikvision products are classified into three levels according to their anti-corrosion performance. Refer to the following description to choose for your using environment.

This model has NO SPECIFIC PROTECTION.

Level	Description
Top-level protection	Hikvision products at this level are equipped for use in areas where professional anti-corrosion protection is a must. Typical application scenarios include coastlines, docks, chemical plants, and more.
Moderate protection	Hikvision products at this level are equipped for use in areas with moderate anti-corrosion demands. Typical application scenarios include coastal areas about 2 kilometers (1.24 miles) away from coastlines, as well as areas affected by acid rain.
No specific protection	Hikvision products at this level are equipped for use in areas where no specific anti-corrosion protection is needed.

▪ Dimension

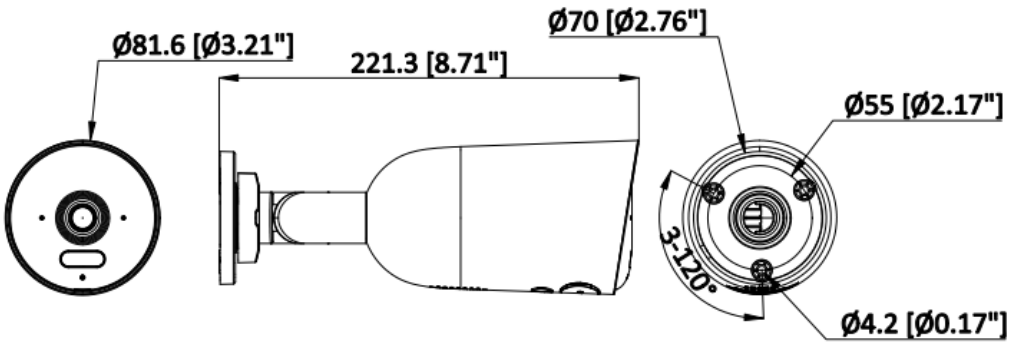

Unit:mm [inch]

SCALE	1:1

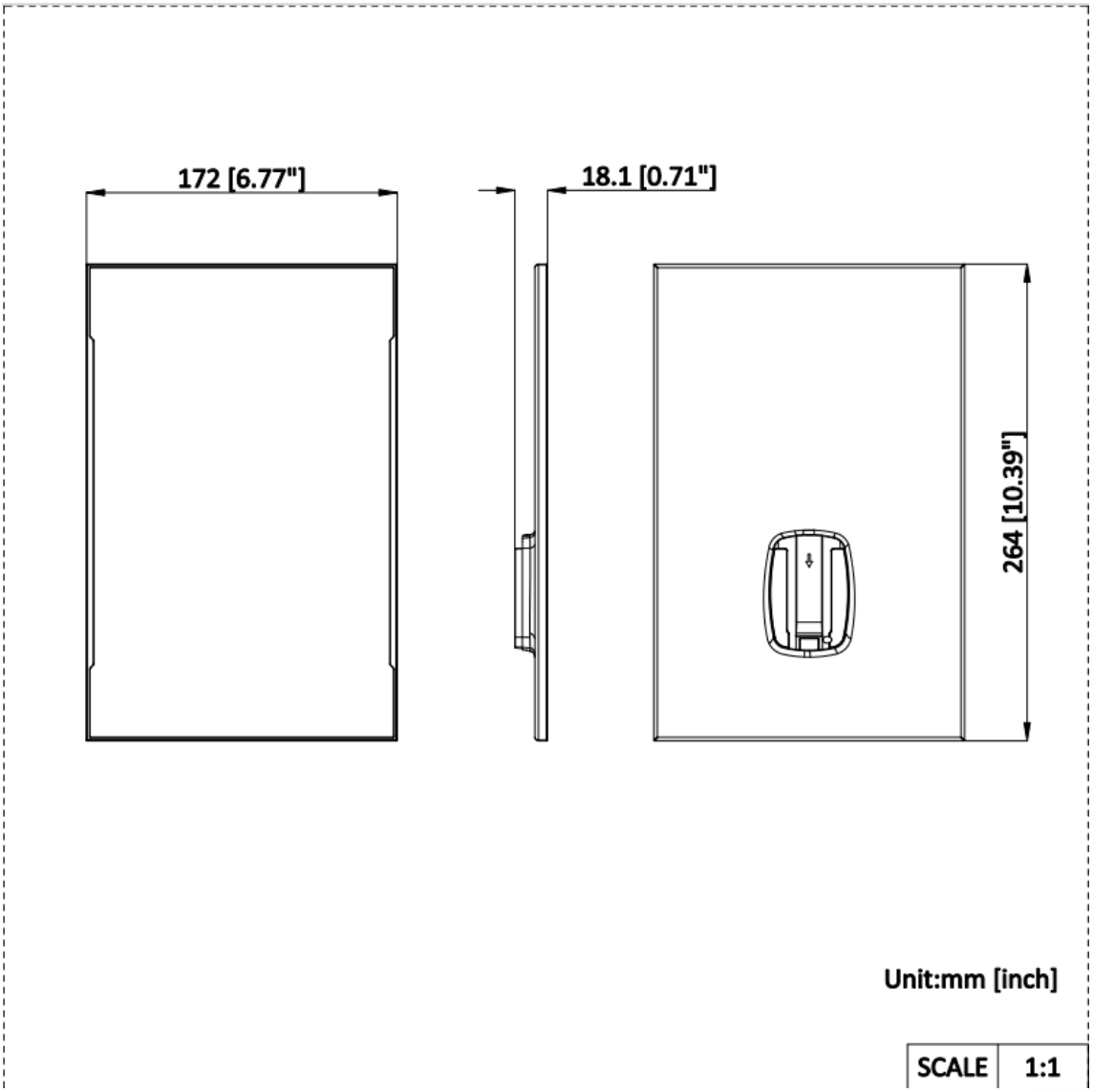
172 [6.77"]
18.1 [0.71"]
264 [10.39"]
Unit:mm [inch]
SCALE 1:1

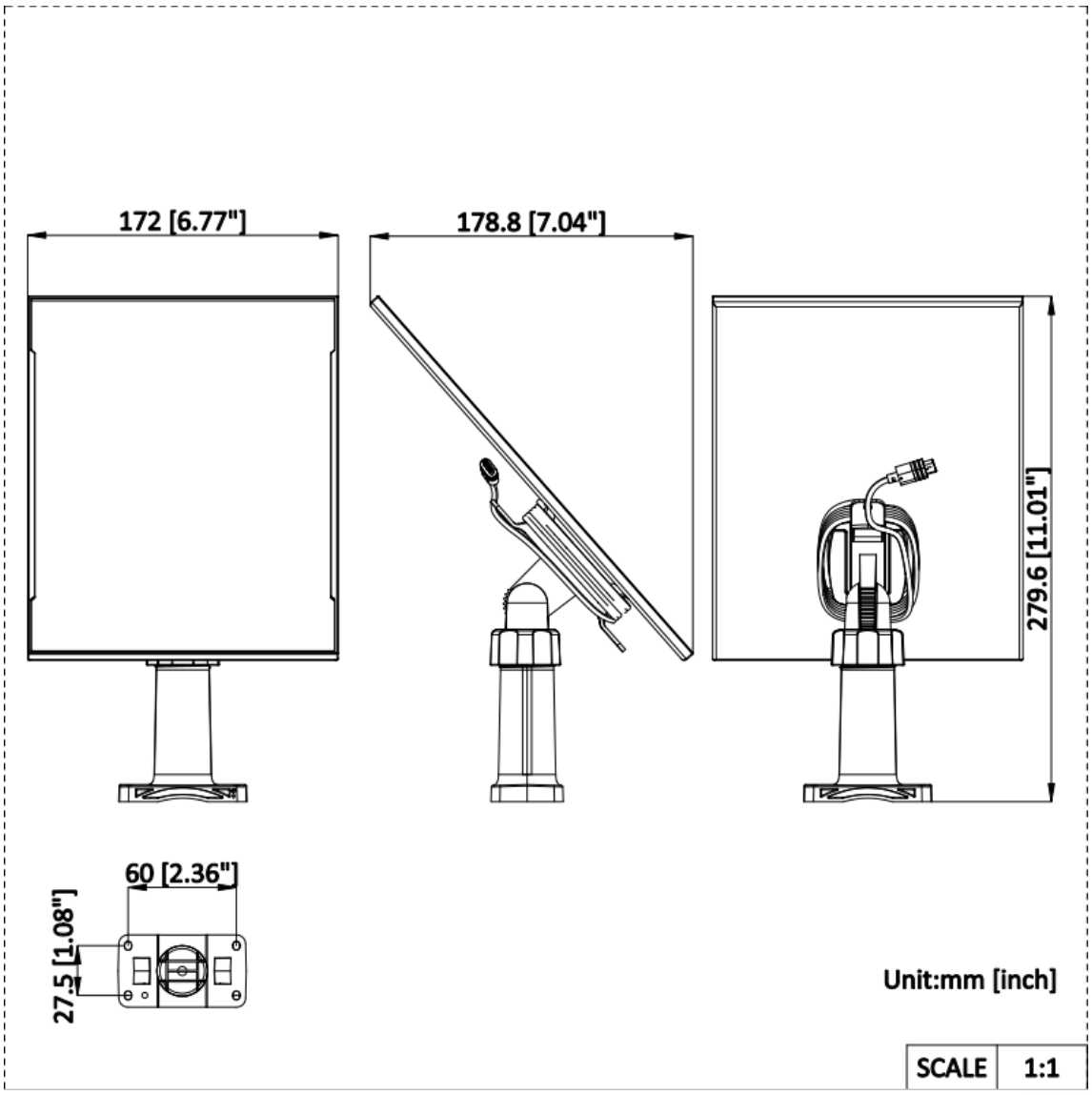

▪ Accessory

▪ Optional

DS-1276ZJ	DS-1276ZJ-SUS	DS-1275ZJ-SUS
		

See Far, Go Further

www.hikvision.com
support@hikvision.com

© Hangzhou Hikvision Digital Technology Co., Ltd. Unless otherwise agreed, Hikvision makes no warranties, express or implied. We reserve the right to introduce modifications without notice.

HIKVISION®