HIKVISION

DS-2CD2326G2-I (D)
2 MP AcuSense Fixed Turret Network Camera

AcuSense

Empowered by deep learning algorithms, Hikvision AcuSense technology brings human and vehicle targets classification alarms to front- and back-end devices. The system focuses on human and vehicle targets, vastly improving alarm efficiency and effectiveness.

- High quality imaging with 2 MP resolution
- Excellent low-light performance with powered-by-DarkFighter technology
- Clear imaging against strong back light due to 120 dB WDR technology
- Efficient H.265+ compression technology
- Focusing on human and vehicle classification based on deep learning
- -U: Built-in microphone for real-time audio security
- Water and dust resistant (IP67)

▪ Specification

Camera	
Image Sensor	1/2.8" Progressive Scan CMOS
Max. Resolution	1920 × 1080
Min. Illumination	Color: 0.002 Lux @ (F1.4, AGC ON),B/W: 0 Lux with IR
Shutter Time	1/3 s to 1/100,000 s
Day & Night	IR cut filter
Angle Adjustment	Pan: 0° to 360°,tilt: 0° to 75°,rotate: 0° to 360°
Lens	
Lens Type	Fixed focal lens, 2.8, 4, and 6 mm optional
Focal Length & FOV	2.8 mm, horizontal FOV 107°, vertical FOV 57°, diagonal FOV 129° 4 mm, horizontal FOV 86°, vertical FOV 47°, diagonal FOV 102°
Lens Mount	M12
Iris Type	Fixed
Aperture	F1.4
Depth of Field	2.8 mm: 1.1 m to ∞ 4 mm: 1.2 m to ∞
DORI	
DORI	2.8 mm: D: 44 m, O: 17 m, R: 9 m, I: 4 m 4 mm: D: 53 m, O: 21 m, R: 11 m, I: 5 m
Illuminator	
Supplement Light Type	IR
Supplement Light Range	Up to 30 m
Smart Supplement Light	Yes
IR Wavelength	850 nm
Video	
Main Stream	50 Hz: 25 fps (1920 × 1080, 1280 × 720) 60 Hz: 30 fps (1920 × 1080, 1280 × 720)
Sub-Stream	50 Hz: 25 fps (640 × 480, 640 × 360) 60 Hz: 30 fps (640 × 480, 640 × 360)
Third Stream	50 Hz: 10 fps (1920 × 1080, 1280 × 720, 640 × 480, 640 × 360) 60 Hz: 10 fps (1920 × 1080, 1280 × 720, 640 × 480, 640 × 360), *Third stream is supported under certain settings.
Video Compression	Main stream: H.265/H.264/H.264+/H.265+ Sub-stream: H.265/H.264/MJPEG Third stream: H.265/H.264
Video Bit Rate	32 Kbps to 8 Mbps
H.264 Type	Baseline Profile,Main Profile,High Profile
H.265 Type	Main Profile
Bit Rate Control	CBR,VBR
Scalable Video Coding (SVC)	H.264 and H.265 encoding
Region of Interest (ROI)	1 fixed region(s) for main stream and sub-stream
Audio	
Audio Type	-U: Mono sound
Audio Compression	-U: G.711/G.722.1/G.726/MP2L2/PCM/MP3/AAC-LC

Audio Bit Rate	-U: 64 Kbps (G.711ulaw/G.711alaw)/16 Kbps (G.722.1)/16 Kbps (G.726)/32 to 192 Kbps (MP2L2)/8 to 320 Kbps (MP3)/16 to 64 Kbps (AAC-LC)
Audio Sampling Rate	-U: 8 kHz/16 kHz/32 kHz/44.1 kHz/48 kHz
Environment Noise Filtering	-U: Yes
Network	
Protocols	TCP/IP, ICMP, HTTP, HTTPS, FTP, DHCP, DNS, DDNS, RTP, RTSP, NTP, UPnP, SMTP, IGMP, 802.1X, QoS, IPv4, IPv6, UDP, Bonjour, SSL/TLS, PPPoE, SNMP, WebSocket, WebSockets
Simultaneous Live View	Up to 6 channels
API	Open Network Video Interface (Profile S, Profile G, Profile T),ISAPI,SDK,ISUP
Smooth Streaming	Yes
User/Host	Up to 32 users 3 user levels: administrator, operator, and user
Security	Password protection, complicated password, HTTPS encryption, 802.1X authentication (EAP-TLS, EAP-LEAP, EAP-MD5), watermark, IP address filter, basic and digest authentication for HTTP/HTTPS, WSSE and digest authentication for Open Network Video Interface, RTP/RTSP over HTTPS, control timeout settings, security audit log, TLS 1.3, host authentication (MAC address)
Network Storage	NAS (NFS, SMB/CIFS),Auto Network Replenishment (ANR), Together with high-end Hikvision memory card, memory card encryption and health detection are supported.
Client	iVMS-4200,Hik-Connect,Hik-Central
Web Browser	Plug-in required live view: IE 10+, Plug-in free live view: Chrome 57.0+, Firefox 52.0+, Local service: Chrome 57.0+, Firefox 52.0+
Image	
Image Parameters Switch	Yes
Image Settings	Rotate mode,saturation,brightness,contrast,sharpness,gain,white balance,adjustable by client software or web browser
Day/Night Switch	Day,Night,Auto,Schedule
Wide Dynamic Range (WDR)	120 dB
SNR	≥ 52 dB
Image Enhancement	BLC,HLC,3D DNR
Privacy Mask	Yes
Interface	
Ethernet Interface	1 RJ45 10 M/100 M self-adaptive Ethernet port
On-Board Storage	Built-in memory card slot, support microSD card, up to 512 GB
Built-in Microphone	-U: Yes
Reset Key	Yes
Event	
Basic Event	Motion detection (support alarm triggering by specified target types (human and vehicle)),video tampering alarm,exception
Smart Event	Line crossing detection, intrusion detection (support alarm triggering by specified target types (human and vehicle)), scene change detection

Linkage	Upload to FTP/NAS/memory card,notify surveillance center,send email,trigger recording,trigger capture
Deep Learning Function	
Face Capture	Yes
General	
Power	12 VDC ± 25%, 0.5 A, max. 6 W,Ø5.5 mm coaxial power plug,reverse polarity protection, PoE: 802.3af, Class 3, 36 V to 57 V, 0.2 A to 0.13 A, max. 7.5 W
Material	Body: aluminum alloy
Dimension	Ø127.3 mm × 96.3 mm (Ø5" × 3.8")
Package Dimension	150 mm × 150 mm × 141 mm (5.9" × 5.9" × 5.6")
Weight	Approx. 570 g (1.3 lb.)
With Package Weight	Approx. 780 g (1.7 lb.)
Storage Conditions	-30 °C to 60 °C (-22 °F to 140 °F). Humidity 95% or less (non-condensing)
Startup and Operating Conditions	-30 °C to 60 °C (-22 °F to 140 °F). Humidity 95% or less (non-condensing)
Language	33 languages English, Russian, Estonian, Bulgarian, Hungarian, Greek, German, Italian, Czech, Slovak, French, Polish, Dutch, Portuguese, Spanish, Romanian, Danish, Swedish, Norwegian, Finnish, Croatian, Slovenian, Serbian, Turkish, Korean, Traditional Chinese, Thai, Vietnamese, Japanese, Latvian, Lithuanian, Portuguese (Brazil), Ukrainian
General Function	Anti-flicker, heartbeat, mirror, privacy mask, flash log, password reset via email, pixel counter
Approval	
EMC	FCC: 47 CFR Part 15, Subpart B, CE-EMC: EN 55032: 2015, EN 61000-3-2:2019, EN 61000-3-3: 2013+A1:2019, EN 50130-4: 2011 +A1: 2014, KC: KN32: 2015, KN35: 2015
Safety	UL: UL 62368-1, CB: IEC 62368-1: 2014+A11, CE-LVD: EN 62368-1: 2014/A11: 2017
Environment	CE-RoHS: 2011/65/EU, WEEE: 2012/19/EU, Reach: Regulation (EC) No 1907/2006
Protection	IP67: IEC 60529-2013

▪ Typical Application

Hikvision products are classified into three levels according to their anti-corrosion performance. Refer to the following description to choose for your using environment.

This model has NO SPECIFIC PROTECTION.

Level	Description
Top-level protection	Hikvision products at this level are equipped for use in areas where professional anti-corrosion protection is a must. Typical application scenarios include coastlines, docks, chemical plants, and more.
Moderate protection	Hikvision products at this level are equipped for use in

	areas with moderate anti-corrosion demands. Typical application scenarios include coastal areas about 2 kilometers (1.24 miles) away from coastlines, as well as areas affected by acid rain.
No specific protection	Hikvision products at this level are equipped for use in areas where no specific anti-corrosion protection is needed.

▪ Dimension

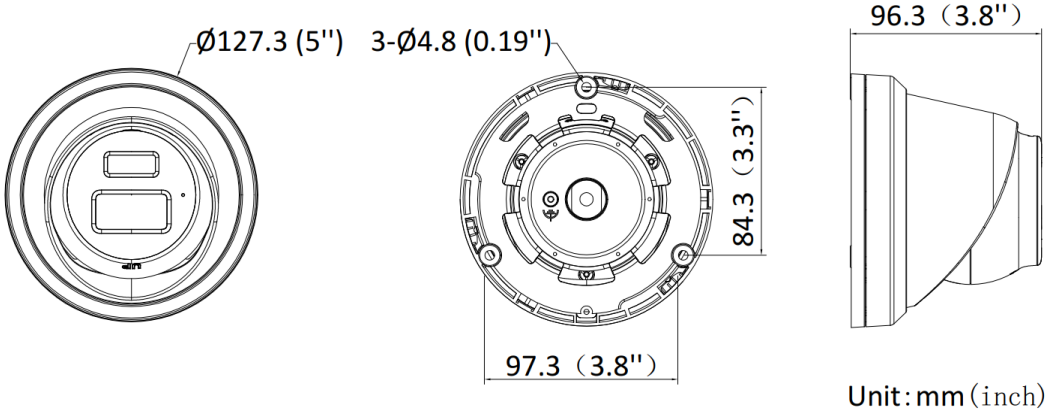

▪ Accessory

▪ Optional

DS-1275ZJ-SUS	DS-1275ZJ-S-SUS	DS-1271ZJ-130-TRL	DS-1276ZJ-SUS	DS-1281ZJ-M
DS-1476ZJ-SUS	**DS-1273ZJ-130B-TRL**	**DS-1280ZJ-DM8**	**DS-220AZJ-145-WA**	**DS-1273ZJ-130-TRL**
		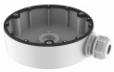		
DS-1475ZJ-SUS	**DS-220AZJ-130-WA**			

▪ Installation Methods

Vertical Pole Mounting DS-1275ZJ-SUS+DS-1273ZJ-130-TRL	Vertical Pole Mounting DS-1275ZJ-S-SUS+DS-220AZJ-130-WA	Vertical Pole Mounting DS-1475ZJ-SUS+DS-220AZJ-145-WA	Pendant Mounting DS-1271ZJ-130-TRL	Corner Mounting DS-1276ZJ-SUS+DS-1273ZJ-130B-TRL
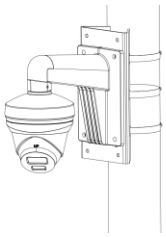				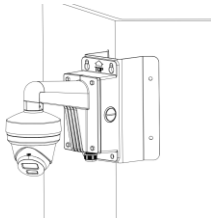
Corner Mounting DS-1476ZJ-SUS+DS-220AZJ-130-WA	**Inclined Ceiling Mounting DS-1281ZJ-M**	**Wall Mounting DS-1273ZJ-130B-TRL**	**Wall Mounting DS-220AZJ-145-WA**	**Wall Mounting DS-1273ZJ-130-TRL+DS-1253ZJ-L**
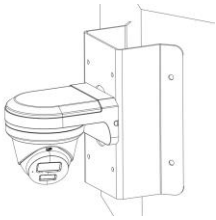				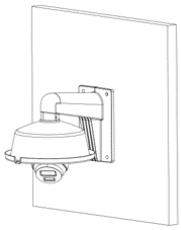
Wall Mounting DS-220AZJ-130-WA	**Junction Box DS-1280ZJ-DM8**			

See Far, Go Further

www.hikvision.com
support@hikvision.com

© Hangzhou Hikvision Digital Technology Co., Ltd. Unless otherwise agreed, Hikvision makes no warranties, express or implied. We reserve the right to introduce modifications without notice.