DS-2DY5432IXG1-M
4MP 32X DarkFighter IR Network Positioning System

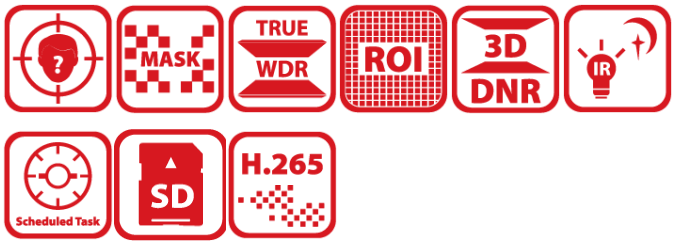

- 1/1.8" progressive scan CMOS
- High quality imaging with 4 MP resolution
- Excellent low-light performance via DarkFighter 2.0 technology
- 32 × optical zoom, 16 × digital zoom
- Clear imaging against strong back light due to 120 dB WDR technology
- Expansive night view with up to 250 m IR distance
- Smart Pan-Tilt Correction

▪ Specification

Camera	
Image Sensor	1/1.8 " progressive scan CMOS
Max. Resolution	2560 × 1440
Min. Illumination	Color: 0.005 Lux @ (F1.6, AGC ON),B/W: 0.001 Lux @ (F1.6, AGC ON),0 Lux with IR
Shutter Speed	1/1s~1/30000 s
Day & Night	Day, Night, Auto, Schedule
Zoom	32 × optical,16 × digital
Slow Shutter	Yes
Lens	
Focal Length	5.9 to 188.8 mm
FOV	Horizontal field of view: 60.2° to 2.3°, vertical field of view: 35.2° to 1.3°, diagonal field of view: 67.4° to 2.6°
Focus	Auto/Semi-automatic/Manual
Aperture	F1.6
Zoom Speed	Approx. 5.6 s
Illuminator	
Supplement Light Type	IR
Supplement Light Range	250 m
Smart Supplement Light	Yes
PTZ	
Movement Range (Pan)	360° endless
Movement Range (Tilt)	From +90° to -90° (auto flip)
Pan Speed	Configurable, from 0.1°/s to 150°/s, Preset speed: 150°/s
Tilt Speed	Configurable, from 0.1°/s to 80°/s Preset Speed: 80°/s
Proportional Pan	Yes
Presets	300
Preset Freezing	Yes
Patrol Scan	8 patrols, up to 32 presets for each patrol
Pattern Scan	4 pattern scans, record time over 10 minutes for each scan
Park Action	Preset/Pattern Scan/Patrol Scan/Auto Scan/Tilt Scan/Random Scan/Frame Scan/Panorama Scan
3D Positioning	Yes
PTZ Status Display	Yes
Scheduled Task	Preset/Pattern Scan/Patrol Scan/Auto Scan/Tilt Scan/Random Scan/Frame Scan/Panorama Scan/Dome Reboot/Dome Adjust/Aux Output
Power-off Memory	Yes

DORI	
O2DCPVS	[PTZ channel]Wide: Overview: 101.7 m, Outline: 50.8 m, Discern: 25.4 m, Perceive: 16.3 m, Characterize: 8.1 m, Validate: 4.1 m, Scrutinize: 1.4 m Tele: Overview: 2543.1 m, Outline: 1271.5 m, Discern: 635.7 m, Perceive: 406.9 m, Characterize: 203.4 m, Validate: 101.7 m, Scrutinize: 33.9 m The OODPCVS values are calculated using pixel densities for different use cases as recommended by the IEC/EN 62676-4: 2025 standard. IEC 62676-4:2025 describes the planning, design, installation, testing, commissioning, and maintaining of video surveillance systems (VSS) comprising image capture device(s), interconnection(s) and image handling device(s), for use in security applications within private or public spaces.
Video	
Main Stream	50 Hz: 25 fps (2560 × 1440, 1920 × 1080, 1280 × 960, 1280 × 720) 60 Hz: 30 fps (2560 × 1440, 1920 × 1080, 1280 × 960, 1280 × 720)
Sub-Stream	50 Hz: 25 fps (704 × 576, 640 × 480, 352 × 288) 60 Hz: 30 fps (704 × 480, 640 × 480, 352 × 240)
Third Stream	50 Hz: 25 fps (1920 × 1080, 1280 × 960, 1280 × 720, 704 × 576, 640 × 480, 352 × 288) 60 Hz: 30 fps (1920 × 1080, 1280 × 960, 1280 × 720, 704 × 480, 640 × 480, 352 × 240)
Video Compression	Main Stream: H.265+/H.265/H.264+/H.264 Sub-stream: H.265/H.264/MJPEG Third Stream: H.265/H.264/MJPEG
Video Bit Rate	32 Kbps to 16384 Kbps
H.264 Type	Baseline Profile/Main Profile/High Profile
H.265 Type	Main Profile
Scalable Video Coding (SVC)	Support
Region of Interest (ROI)	8 fixed regions for each stream
Audio	
Audio Compression	G.711,G.722.1,G.726,MP2L2,PCM,MP3,AAC-LC
Audio Bit Rate	16 Kbps(G.722.1)/16 Kbps(G.726)/16~64 Kbps(AAC-LC)/8~160 Kbps(MP3)/32~160 Kbps(MP2L2)/64 Kbps(G.711)
Audio Sampling Rate	8 kHz/16 kHz/32 kHz/48 kHz
Environment Noise Filtering	Yes
Network	
Protocols	IPv4/IPv6, HTTP, HTTPS, 802.1x, QoS, FTP, SMTP, UPnP, SNMP, DNS, DDNS, NTP, RTSP, RTCP, RTP, TCP/IP, UDP, IGMP, ICMP, DHCP, PPPoE, Bonjour
Simultaneous Live View	Up to 20 channels
API	Open Network Video Interface (Version 19.12, Profile S, Profile G, Profile T , Profile M)
User/Host	Up to 32 users, 3 user levels: administrator, operator, and user
Security	Password protection, complicated password, HTTPS encryption, 802.1X authentication (EAP-TLS, EAP-LEAP, EAP-MD5), watermark, IP address filter, basic and digest authentication for HTTP/HTTPS, RTP/RTSP over HTTPS, control timeout settings, security audit log, TLS 1.2, TLS 1.3, host authentication (MAC address)
Network Storage	NAS (NFS, SMB/CIFS), auto network replenishment (ANR)
Client	iVMS-4200, HikCentral Pro, Hik-Connect
Web Browser	IE11, Chrome 57+, Firefox 52+, Safari 11+
Image	
Image Parameters Switch	Yes

Image Settings	Saturation, brightness, contrast, sharpness, gain, and white balance adjustable by client software or web browser
Day/Night Switch	Day, Night, Auto, Schedule
Wide Dynamic Range (WDR)	True WDR
SNR	≥52dB
Defog	Digital defog
Image Stabilization	EIS
Image Enhancement	BLC,HLC,3D DNR
Privacy Mask	24 programmable polygon privacy masks, mask color or mosaic configurable
Regional Focus	Yes
Regional Exposure	Yes
Interface	
Ethernet Interface	1 RJ45 10 M/100 M Ethernet
On-board Storage	Built-in memory card slot, support microSD/microSDHC/microSDXC card, up to 512 GB
RS-485	1 RS-485 (Half duplex, HIKVISION, Pelco-P, Pelco-D, self-adaptive)
Reset	Yes
Event	
Basic Event	Motion detection, video tampering alarm, exception, alarm input and output
Smart Event	intrusion detection,region exiting detection,loitering detection,people gathering detection,audio exception detection,fast moving detection,parking detection,Line crossing detection,region entrance detection,unattended baggage detection,object removal detection
Linkage	send email,trigger alarm output,Upload to FTP/NAS/memory card,notify surveillance center,trigger recording,audible warning
Deep Learning Function	
Face Capture	Support detecting up to 10 faces at the same time. Support detecting, tracking, capturing, grading, selecting of face in motion, and output the best face picture of the face.
Multi-Target-Type Detection	Supports simultaneous detection and capture of human body, face and vehicle
Linkage and Tracking	
Smart Tracking	auto-tracking
General	
Power	12 VDC (Max. 60 W, including max. 12 W for IR and max. 2 W for heater)
Dimension	Ø332 mm × 203 mm × 222 mm (Ø 13.07" × 7.99" × 8.74")
Weight	Approx. 7.7 kg (16.98 lb.)
Material	ADC12
Operating Condition	Temperature: Outdoor: -40°C to 70°C (-40°F to 158°F), Humidity: ≤ 90%
Wiper	Yes
Approval	
Protection	IP66 (IEC 60529-2013),IK10 (IEC 62262:2002),TVS 6000 V lightning protection, surge protection and voltage transient protection

▪ Typical Application

Hikvision products are classified into three levels according to their anti-corrosion performance. Refer to the following description to choose for your using environment.

This model has NO SPECIFIC PROTECTION.

Level	Description
Top-level protection	Hikvision products at this level are equipped for use in areas where professional anti-corrosion protection is a must. Typical application scenarios include coastlines, docks, chemical plants, and more.
Moderate protection	Hikvision products at this level are equipped for use in areas with moderate anti-corrosion demands. Typical application scenarios include coastal areas about 2 kilometers (1.24 miles) away from coastlines, as well as areas affected by acid rain.
No specific protection	Hikvision products at this level are equipped for use in areas where no specific anti-corrosion protection is needed.

▪ Dimension

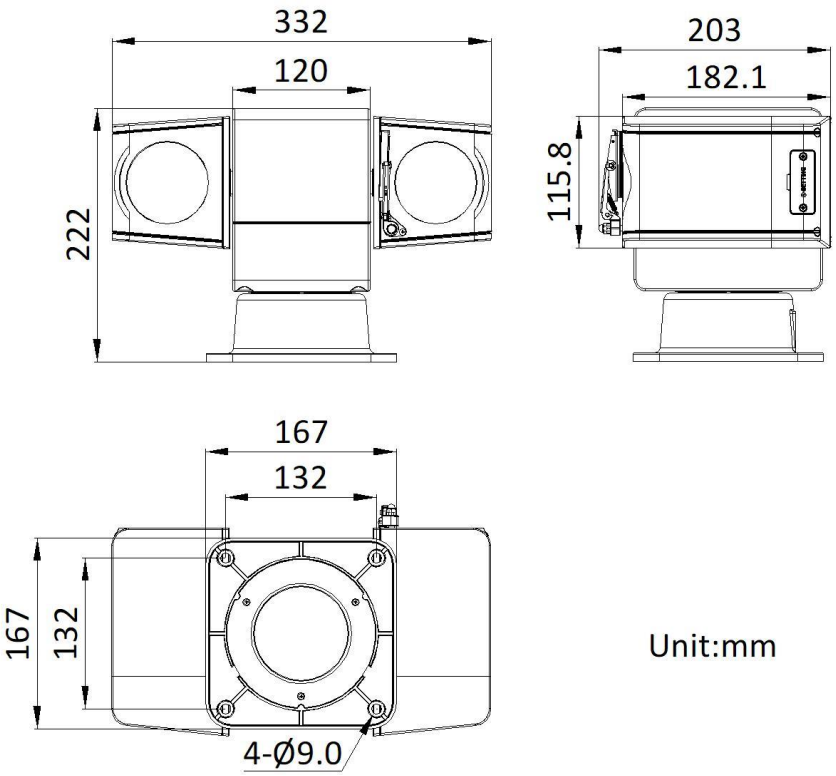

▪ Accessory

▪ Optional

DS-1693ZJ-S

- **Installation Methods**

Wall Mounting DS-1693ZJ-S
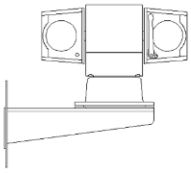

See Far, Go Further

www.hikvision.com
support@hikvision.com

© Hangzhou Hikvision Digital Technology Co., Ltd. Unless otherwise agreed, Hikvision makes no warranties, express or implied. We reserve the right to introduce modifications without notice.