DS-2XC6244G2-LIZRS
316L 4MP 15m Underwater Vari-focal Bullet

- 316L stainless steel enclosure, protecting cameras to be used in corrosive environments, providing reliability and longevity compared to standard cameras
- IP68: the camera can be used under water up to 15 meters
- H.265+/H.265/H.264+/H.264 encoding: efficient compression technology saves storage space and reduces bandwidth requirements
- DarkFighter technology enables the capture of high quality color images in even the dimmest lighting environments
- True WDR technology provides clear imaging even with strong back lighting
- Wiper Function Supported

▪ Specification

Camera	
Image Sensor	1/1.8" Progressive Scan CMOS
Max. Resolution	2560 × 1440
Min. Illumination	Color: 0.0008 Lux @ (F1.2, AGC ON),0 Lux with light,B/W: 0.0002 Lux @ (F1.2, AGC ON),B/W: 0 Lux with IR
Shutter Time	1 s to 1/100,000 s
Day & Night	IR cut filter
Lens	
Lens Type	Varifocal lens, motorized lens, 2.8 to 12 mm
Focal Length & FOV	2.8 to 12 mm, horizontal FOV 74.6° to 29.7°, vertical FOV 41.3° to 16.8°, diagonal FOV 86.0° to 34.0°
Focus	Auto,Semi-auto,Manual
Aperture	F1.4
Illuminator	
Supplement Light Type	IR,White Light
Supplement Light Range	IR: Turbidity (NTU) : 0 to 5, up to 1 m, Turbidity (NTU) : 5 to 15, up to 0.5 m, Turbidity (NTU) : > 15, up to 0.2 m Light: Turbidity (NTU) : 0 to 5, up to 1 m, Turbidity (NTU) : 5 to 15, up to 0.5 m, Turbidity (NTU) : > 15, up to 0.2 m
IR Wavelength	850 nm
AI Open Platform	
Model Specification	Supports 4 model packages. The device runs only 1 model at the same time.
Task Type	Algorithm type for AI Open Platform high-performance model (small model): Detection, Classification.
Event Type	Region target exception status detection, region target number counting, area overlap ratio counting, area overlap ratio exception detection, line crossing target detection, line crossing target counting, full analysis rule, combined rule
Video	
Main Stream	50 Hz: 25 fps (2560 × 1440, 1920 × 1080, 1280 × 960, 1280 ×720) 60 Hz: 30 fps (2560 × 1440, 1920 × 1080, 1280 × 960, 1280 ×720)
Sub-Stream	50 Hz: 25 fps (704 × 576, 640 × 480, 352 × 288) 60 Hz: 30 fps (704 × 480, 640 × 480, 352 × 240)
Third Stream	50 Hz: 25 fps (1920 × 1080, 1280 × 960, 1280 × 720, 704 × 576, 640 × 480, 352 × 288) 60 Hz: 30 fps (1920 × 1080, 1280 × 960, 1280 × 720, 704 × 480, 640 × 480, 352 × 240)
Video Compression	Main stream: H.264/H.264+/H.265/H.265+, Sub-stream: MJPEG/H.264/H.265, Third stream: MJPEG/H.264/H.265
Video Bit Rate	32 Kbps to 16 Mbps
H.264 Type	Baseline Profile,Main Profile,High Profile
H.265 Type	Main Profile
Bit Rate Control	CBR,VBR
Scalable Video Coding (SVC)	H.264 and H.265 encoding
Region of Interest (ROI)	5 fixed regions for main stream and sub-stream
Target Cropping	Yes

Network	
Protocols	SNMP,DDNS,IGMP,RTP,DHCP,FTP,WebSockets,DNS,TCP/IP,IPv6,SMTP,RTSP,ICMP,SSL/TLS,SFTP,IPv4,HTTPS,HTTP,WebSocket,NTP,PPPoE,UDP,UPnP,QoS,Bonjour,802.1X,RTCP
API	Open Network Video Interface (Profile Main Profile),ISAPI,SDK,ISUP
Simultaneous Live View	Up to 20 channels
User/Host	Up to 32 users 3 user levels: administrator, operator, and user
Network Storage	NAS (NFS, SMB/CIFS),CVR,NVR,Auto Network Replenishment (ANR), Together with high-end Hikvision memory card, memory card encryption and health detection are supported.
Client	iVMS-4200,Hik-Connect,Hik-Central
Web Browser	Plug-in required live view: IE 10, IE 11, Plug-in free live view: Chrome 57.0+, Firefox 52.0+, Edge 89+, Safari 11+, Local service: Chrome 57.0+, Firefox 52.0+, Edge 89+
Image	
Image Parameters Switch	Yes
Image Settings	Rotate mode,saturation,brightness,contrast,sharpness,gain,white balance,adjustable by client software or web browser
Day/Night Switch	Day,Night,Auto,Schedule,Alarm Trigger
Wide Dynamic Range (WDR)	120 dB
Defog	Yes
Image Enhancement	BLC,HLC,3D DNR
Privacy Mask	8 programmable polygon privacy masks
SNR	≥ 50 dB
Interface	
Ethernet Interface	1 RJ45 10 M/100 M self-adaptive Ethernet port
On-Board Storage	Built-in memory card slot, support microSD/microSDHC/microSDXC card, up to 512 GB, *You are recommended to purchase memory card together with the product if needed. After ordering, the memory card will be installed to product during manufacturing.
Alarm	1 input, 1 output (max. 24 VDC, 1 A)
RS-485	1 RS-485 (Half duplex, HIKVISION, Pelco-P, Pelco-D, self-adaptive)
Event	
Basic Event	Motion detection,video tampering alarm,exception (network disconnected, IP address conflict, illegal login, HDD full, HDD error)
Smart Event	Line crossing detection, intrusion detection, region entrance detection, region exiting detection,Unattended baggage detection, object removal detection,Scene change detection
Linkage	Upload to FTP/NAS/memory card,notify surveillance center,send email,trigger alarm output,trigger recording,trigger capture
General	
Power	36 VDC ± 20%, 0.54 A, max. 19 W,2-core terminal block, PoE: IEEE 802.3at, Class 4, max. 22 W
Material	316L and anti-corrosion coating
Dimension	224.0 mm × 208.0 mm × 230.1 mm (8.82" × 8.19" × 9.06")

Package Dimension	700 mm × 530 mm × 365 mm (27.56" × 20.87" × 14.37")
Weight	Approx. 9380 g (20.67 lb.)
With Package Weight	Approx. 12.1 kg (26.68 lb.)
Startup and Operating Conditions	-10 °C to 60 °C (14 °F to 140 °F). Humidity 100% or less (non-condensing)
Language	33 languages: English, Russian, Estonian, Bulgarian, Hungarian, Greek, German, Italian, Czech, Slovak, French, Polish, Dutch, Portuguese, Spanish, Romanian, Danish, Swedish, Norwegian, Finnish, Croatian, Slovenian, Serbian, Turkish, Korean, Traditional Chinese, Thai, Vietnamese, Japanese, Latvian, Lithuanian, Portuguese (Brazil), Ukrainian
Wiper	Yes
Cable Length	15 m (49.2 ft.)
Approval	
Safety	CB: IEC 62368-1:2014+A11, CE-LVD: EN 62368-1:2014/A11:2017
Protection	IP68 (IEC 60529-2013) (within 15 m underwater)

▪ Dimension

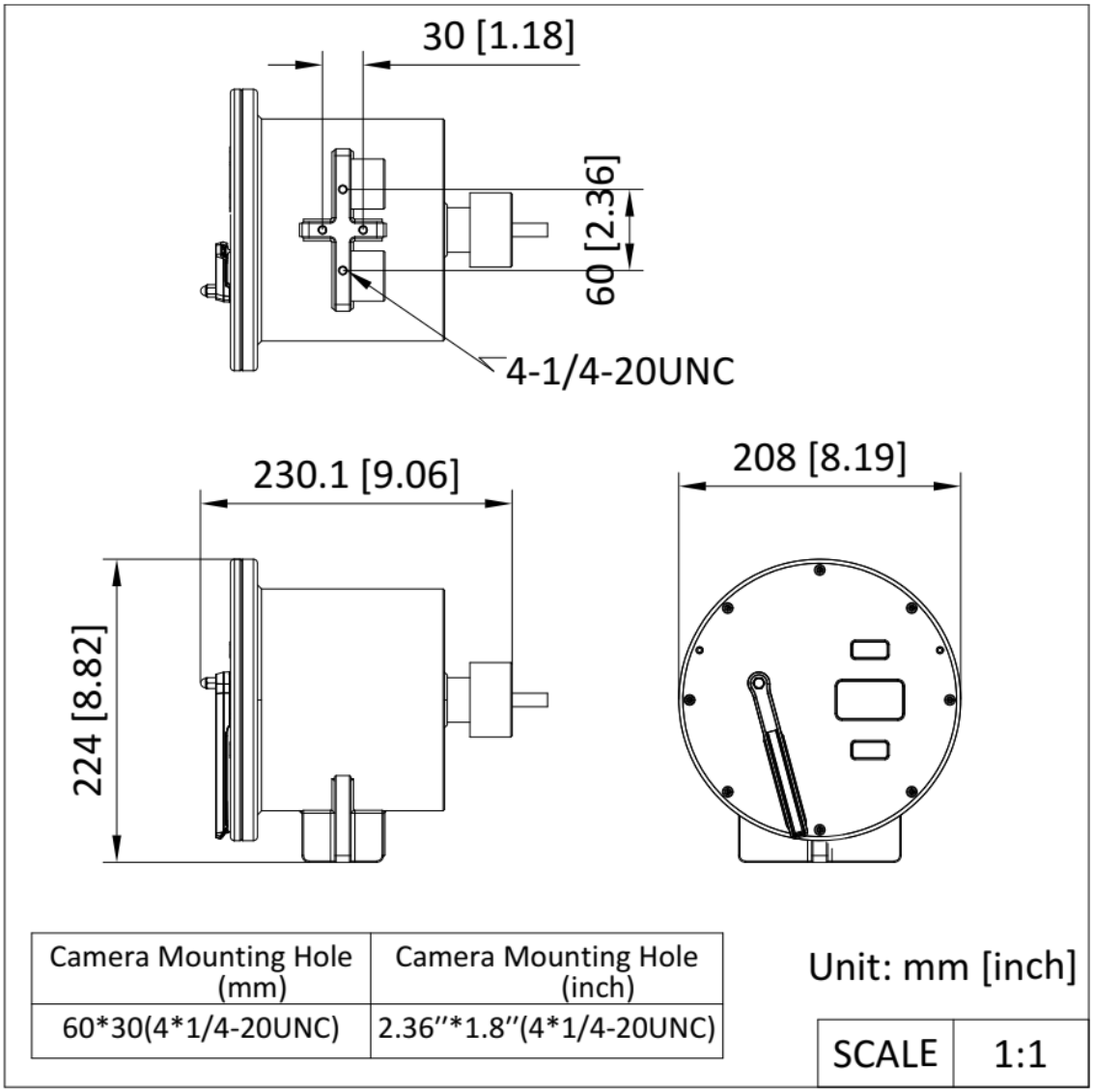

▪ Accessory

▪ Included

DS-1706ZJ-Y-AC(OS)

See Far, Go Further

www.hikvision.com
support@hikvision.com

© Hangzhou Hikvision Digital Technology Co., Ltd. Unless otherwise agreed, Hikvision makes no warranties, express or implied. We reserve the right to introduce modifications without notice.