HIKVISION

DS-2CD3367G3P-LIHSUY/SL
6 MP Panoramic ColorVu Fixed Turret Network Camera

AcuSense

DarkFighter 2.0

Hikvision has been dedicated to develop products with security since established. Hikvision always follows security by design principle and has adopted many methods of security technologies into our product development lifecycle, including terminal security, data security, application security, network security, and privacy protection. In the meantime, the security technologies used by Hikvision are all in compliance with local applicable laws and safety regulations. These security measures could enhance product's cyber security protection capability and protect your devices as well as your data from malicious cyber attacks.
Hikvision Darkfighter 2.0 technology provides 24/7 vivid colorful images with F1.0 advanced lenses, high performance sensors and friendly lighting. F1.0 super-aperture collects more light to produce brighter images. Advanced sensor technology can vastly improve the utilization of available light.

- One image that presents all the scenes covered by the camera
- HIK AI-ISP for excellent noise reduction effect
- 24/7 colorful imaging
- Scene-adaptive WDR
- Focus on Person and Vehicle classification based on deep learning
- Built-in arrayed dual-microphone for real-time high quality audio security
- Provide real-time security via built-in two-way audio
- -Y: Anti-corrosion design, providing reliability and longevity compared to standard (NEMA4X)
- Smart Hybrid Light: Integrates IR and White lights, 3 supplemental lighting modes
- Dust and water resistant (IP67)
- Audio and alarm interface available
- Active strobe light and audio alarm to warn intruders off

▪ Specification

Camera	
Image Sensor	1/2.5" Progressive Scan CMOS
Max. Resolution	3632 × 1632
Min. Illumination	Color: 0.0005 Lux @ (F1.0, AGC ON),0 Lux with light
Shutter Time	1 s to 1/100,000 s
Day & Night	IR cut filter
Angle Adjustment	Pan: 0° to 360°,tilt: 0° to 75°,rotate: 0° to 360°
Lens	
Lens Type	Fixed focal lens, 2.8 mm
Focal Length & FOV	2.8 mm, horizontal FOV 186.4°, vertical FOV 78°
Lens Mount	M12
Iris Type	Fixed
Aperture	F1.0
Depth of Field	2.8 mm: 1.2 m to ∞
Pixel Density	
DORI	2.8 mm: D: 43 m, O: 17 m, R: 8 m, I: 4 m
Illuminator	
Supplement Light Type	IR,White Light
Supplement Light Range	Up to 40 m
Smart Supplement Light	Yes
IR Wavelength	850 nm
Video	
Main Stream	50 Hz: 20 fps (3632 × 1632) 60 Hz: 20 fps (3632 × 1632)
Sub-Stream	50 Hz: 20 fps (1200 × 536, 960 × 432) 60 Hz: 20 fps(1200 × 536, 960 × 432)
Video Compression	Main stream: H.265/H.264/H.264+/H.265+, Sub-stream: H.265/H.264/MJPEG
Video Bit Rate	32 Kbps to 16 Mbps
H.264 Type	Baseline Profile,Main Profile,High Profile
H.265 Type	Main Profile
Bit Rate Control	CBR,VBR
Scalable Video Coding (SVC)	H.264 and H.265 encoding
Region of Interest (ROI)	5 fixed regions for each stream
e-PTZ	No
Audio	
Audio Type	Mono sound
Audio Compression	G.711/G.722.1/G.726/MP2L2/PCM/MP3/AAC-LC
Audio Bit Rate	64 Kbps (G.711ulaw/G.711alaw)/16 Kbps (G.722.1)/16 Kbps (G.726)/32 to 192 Kbps (MP2L2)/8 to 320 Kbps (MP3)/16 to 64 Kbps (AAC-LC)
Audio Sampling Rate	8 kHz/16 kHz/32 kHz/48 kHz
Environment Noise Filtering	Yes
Network	
Protocols	UPnP,SFTP,ICMP,802.1X,WebSocket,PPPoE,DHCP,IGMP,SNMP,WebSockets,FTP,SMTP, HTTPS,HTTP,RTP,RTCP,TCP/IP,SSL/TLS,RTSP,DDNS,UDP,QoS,IPv4,IPv6,NTP,DNS

Simultaneous Live View	Up to 6 channels
API	ONVIF (Profile S, Profile G, Profile T),ISAPI,SDK,ISUP
User/Host	Up to 32 users 3 user levels: administrator, operator, and user
Security	802.1X authentication(EAP-LEAP,EAP-TLS,EAP-MD5,EAP-P EAP), Password protection, RTP/RTSP over HTTPS, host authentication (MAC address), basic and digest authentication for HTTP/HTTPS, TLS 1.2, security audit log, complicated password, control timeout settings, IP address filter, HTTPS encryption, WSSE and digest authentication for Open Network Video Interface, AES128/256, TLS 1.3, watermark
Network Storage	NAS (NFS, SMB/CIFS)
Client	iVMS-4200,Hik-Connect,Hik-Central
Web Browser	Plug-in free live view: Chrome 91+, Firefox 88+, Edge 91+, Safari 13+ Local service: Chrome 91+, Firefox 88+, Edge 91+
Image	
Image Parameters Switch	Yes
Image Settings	saturation,brightness,contrast,sharpness,gain,white balance,adjustable by client software or web browser
Day/Night Switch	Day,Night,Auto,Schedule
Image Enhancement	BLC , HLC , Distortion Correction , 3D DNR , Defog
SNR	≥ 52 dB
Wide Dynamic Range (WDR)	130 dB
Image Stabilization	No
Privacy Mask	4 programmable polygon privacy masks
Interface	
Ethernet Interface	1 RJ45 10 M/100 M self-adaptive Ethernet port
On-Board Storage	Built-in memory card slot, support microSD/microSDHC/microSDXC card, up to 512 GB
Built-in Speaker	Max. power consumption: 2 W, max. sound pressure level: 10 cm: 110 dB.
Audio	Built-in Microphone: Arrayed dual-microphone, 1 input (line in), two-core terminal block, max. input amplitude: 3.3 Vpp, input impedance: 4.7 KΩ, interface type: non-equilibrium, 1 output (line out), two-core terminal block, max. output amplitude: 3.3 Vpp, output impedance: 100 Ω, interface type: non-equilibrium
Alarm	1 input, 1 output (max. 24 VDC/24 VAC, 1 A)
Reset Key	Yes
Power Output	12 VDC, max. 100 mA
Event	
Basic Event	Motion detection (support alarm triggering by specified target types (human and vehicle)),video tampering alarm,exception,alarm input and output
Smart Event	Scene change detection,Line crossing detection, intrusion detection, region entrance detection, region exiting detection,audio exception detection
Linkage	notify surveillance center,trigger alarm output,trigger recording,trigger capture,audible warning,send email
Deep Learning Function	
Face Capture	No
People Counting	No

Perimeter Protection	Line crossing, intrusion, region entrance, region exiting Support alarm triggering by specified target types (human and vehicle)
General	
Power	12 VDC ± 25%, 1.67 A, max. 20 W,Ø5.5 mm coaxial power plug,reverse polarity protection, PoE: IEEE 802.3at, Class 4, max. 24 W
Material	Cover: Metal, main body: Metal
Dimension	Ø138.6 mm × 125 mm (Ø5.46" × 4.92")
Package Dimension	170 mm × 170 mm × 160 mm (6.69" × 6.69" × 6.30")
Weight	Approx. 840 g (1.85 lb.)
With Package Weight	Approx. 1070 g (2.36 lb.)
Storage Conditions	-40 °C to 60 °C (-40 °F to 140 °F). Humidity 95% or less (non-condensing)
Startup and Operating Conditions	-40 °C to 60 °C (-40 °F to 140 °F). Humidity 95% or less (non-condensing)
General Function	Heartbeat,flash log,password reset via email,pixel counter,anti-banding
Language	33 languages: English, Russian, Estonian, Bulgarian, Hungarian, Greek, German, Italian, Czech, Slovak, French, Polish, Dutch, Portuguese, Spanish, Romanian, Danish, Swedish, Norwegian, Finnish, Croatian, Slovenian, Serbian, Turkish, Korean, Traditional Chinese, Thai, Vietnamese, Japanese, Latvian, Lithuanian, Portuguese (Brazil), Ukrainian
Flashing Light	White Light
Approval	
EMC	CE-EMC: EN 55032:2015+A1:2020, EN 50130-4:2011+A1:2014, EN IEC 61000-3-2:2019+A1:2021, EN 61000-3-3:2013+A1:2019+A2:2021, RCM: AS/NZS CISPR 32: 2015, IC: ICES-003: Issue 7, KC: KN32: 2015, KN35: 2015
Safety	CB: IEC 62368-1: 2014+A11, CE-LVD: EN 62368-1: 2014/A11: 2017
Environment	CE-RoHS: 2011/65/EU, WEEE: 2012/19/EU, Reach: Regulation (EC) No 1907/2006
Protection	IP67: IEC 60529-2013,IK10: IEC 62262:2002
Anti-Corrosion Protection	NEMA 4X (NEMA 250-2018)

▪ Typical Application

Hikvision products are classified into three levels according to their anti-corrosion performance. Refer to the following description to choose for your using environment.

This model has MODERATE PROTECTION.

Level	Description
Top-level protection	Hikvision products at this level are equipped for use in areas where professional anti-corrosion protection is a must. Typical application scenarios include coastlines, docks, chemical plants, and more.
Moderate protection	Hikvision products at this level are equipped for use in

	areas with moderate anti-corrosion demands. Typical application scenarios include coastal areas about 2 kilometers (1.24 miles) away from coastlines, as well as areas affected by acid rain.
No specific protection	Hikvision products at this level are equipped for use in areas where no specific anti-corrosion protection is needed.

▪ Dimension

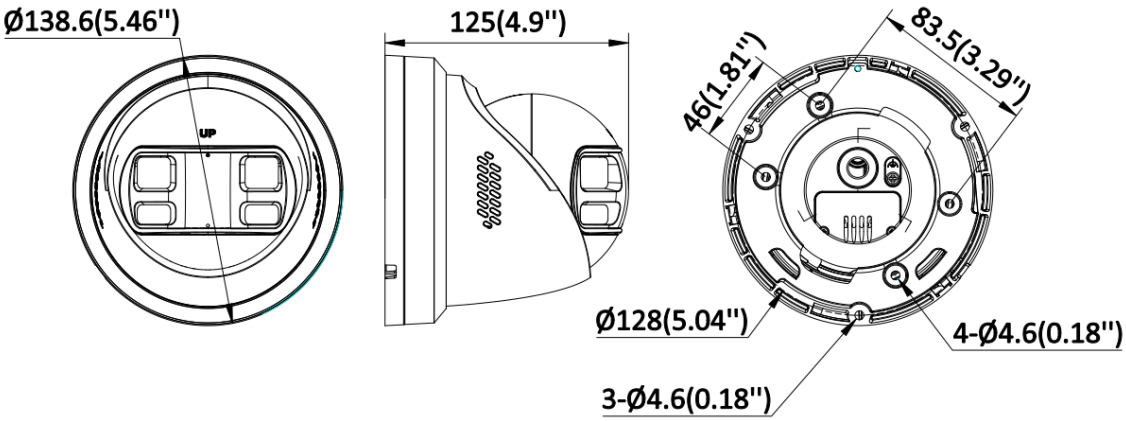

Unit: mm [inch]

▪ Accessory

▪ Optional

DS-1275ZJ-SUS	DS-1276ZJ-SUS	DS-1271ZJ-140-Y	DS-1280ZJ-PT6-Y	DS-1273ZJ-140-Y
			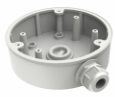	
DS-1273ZJ-140B-Y	**DS-1475ZJ-SUS**	**DS-1476ZJ-SUS**	**DS-1275ZJ-S-SUS**	**DS-220AZJ-145-WAY**

▪ Installation Methods

Vertical Pole Mounting DS-1275ZJ-SUS+DS-1273ZJ-140B-Y	Vertical Pole Mounting DS-1276ZJ-SUS+DS-1273ZJ-140-Y	Vertical Pole Mounting DS-1475ZJ-SUS+DS-220AZJ-145-WAY	Vertical Pole Mounting DS-1275ZJ-S-SUS+DS-220AZJ-145-WAY	Pendant Mounting DS-1271ZJ-140-Y+DS-1280ZJ-PT6-Y
	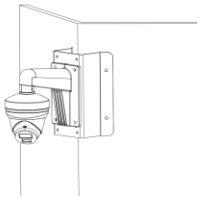			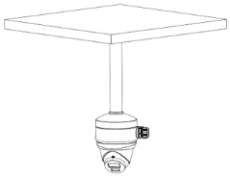
Junction Box DS-1280ZJ-PT6-Y	**Wall Mounting DS-1273ZJ-140-Y+DS-1280ZJ-PT6-Y**	**Wall Mounting DS-1273ZJ-140B-Y+DS-1253ZJ-L**	**Wall Mounting DS-220AZJ-145-WAY**	**Corner Mounting DS-1476ZJ-SUS+DS-220AZJ-145-WAY**
	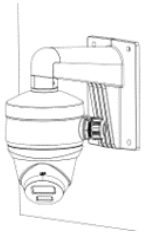			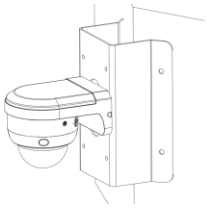

See Far, Go Further

www.hikvision.com
support@hikvision.com

© Hangzhou Hikvision Digital Technology Co., Ltd. Unless otherwise agreed, Hikvision makes no warranties, express or implied. We reserve the right to introduce modifications without notice.