HIKVISION

# DS-2CD2343G2P-LISU/S(L)(RB)
# 4 MP Panoramic AcuSense Fixed Turret Network Camera

- 180° Field of view
- High quality imaging with 4 MP resolution
- Support Person and Vehicle Detection
- Smart Hybrid Light: advanced technology with long range
- Efficient H.265+ compression technology
- Support on-board storage up to 512 GB (SD card slot)
- Provide real-time security via built-in two-way audio
- Water and dust resistant (IP67)
- Active strobe light and audio alarm to warn intruders off

## ▪ Specification

| | |
|---|---|
| **Camera** | |
| Image Sensor | 1/2.5" Progressive Scan CMOS |
| Max. Resolution | 3008 × 1328 |
| Min. Illumination | Color: 0.005 Lux @ (F1.6, AGC ON),0 Lux with light |
| Shutter Time | 1 s to 1/100,000 s |
| Day & Night | IR cut filter |
| Angle Adjustment | Pan: 0° to 360°,tilt: 0° to 75°,rotate: 0° to 360° |
| **Lens** | |
| Lens Type | Fixed focal lens, 2.8 mm |
| Focal Length & FOV | 2.8 mm, horizontal FOV 180°, vertical FOV 77° |
| Lens Mount | M12 |
| Iris Type | Fixed |
| Aperture | F1.6 |
| **Pixel Density** | |
| DORI | 2.8 mm, D: 42 m, O: 16 m, R: 8 m, I: 4 m |
| **Illuminator** | |
| Supplement Light Type | IR,White Light |
| Supplement Light Range | Up to 30 m |
| Smart Supplement Light | Yes |
| IR Wavelength | 850 nm |
| **Video** | |
| Main Stream | 50 Hz: 20 fps (3008 x 1328)<br>60 Hz: 20 fps (3008 x 1328) |
| Sub-Stream | 50 Hz: 20 fps (1200×536, 960 × 432)<br>60 Hz: 20 fps (1200×536, 960 × 432) |
| Video Compression | Main stream: H.265+/H.265/H.264+/H.264,<br>Sub-stream: H.265/H.264/MJPEG |
| Video Bit Rate | 32 Kbps to 16 Mbps |
| H.264 Type | Baseline Profile,Main Profile,High Profile |
| H.265 Type | Main Profile |
| Bit Rate Control | CBR,VBR |
| Scalable Video Coding (SVC) | H.264 and H.265 encoding |
| Region of Interest (ROI) | 1 fixed region for main stream |
| **Audio** | |
| Audio Type | Mono sound |
| Audio Compression | G.711/G.722.1/G.726/MP2L2/PCM/AAC-LC |
| Audio Bit Rate | 64 Kbps (G.711)/16 Kbps (G.722.1)/16 Kbps (G.726)/32 to 160 Kbps (MP2L2)/16 to 64 Kbps (AAC-LC) |
| Audio Sampling Rate | 8 kHz/16 kHz |
| Environment Noise Filtering | Yes |
| **Network** | |
| Protocols | TCP/IP, ICMP, DHCP, DNS, HTTP, RTP, RTSP, RTCP, NTP, IPv4, IPv6, IGMP, UDP, QoS, FTP, SMTP |
| Simultaneous Live View | Up to 6 channels |
| API | ONVIF (Profile S, Profile T, Profile G),ISAPI,SDK |

| | |
|---|---|
| User/Host | Up to 32 users<br>3 user levels: administrator, operator, and user |
| Security | Password protection, complicated password, watermark, basic and digest authentication for HTTP, WSSE and digest authentication for Open Network Video Interface, security audit log, host authentication (MAC address) |
| Client | iVMS-4200,Hik-Connect |
| Web Browser | Plug-in required live view: IE 11,<br>Local service: Chrome 80+, Firefox 80+, Edge 89+ |
| **Image** | |
| Image Settings | Rotate mode,saturation,brightness,contrast,sharpness,gain,white balance,adjustable by client software or web browser |
| Day/Night Switch | Day,Night,Auto,Schedule |
| Wide Dynamic Range (WDR) | 120 dB |
| SNR | ≥ 52 dB |
| Image Enhancement | BLC,HLC,3D DNR |
| Privacy Mask | 4 programmable polygon privacy masks |
| **Interface** | |
| Ethernet Interface | 1 RJ45 10 M/100 M self-adaptive Ethernet port |
| On-Board Storage | Built-in memory card slot, support microSD/microSDHC/microSDXC card, up to 512 GB |
| Built-in Microphone | Yes,1 built-in microphone |
| Built-in Speaker | Yes, 1 built-in speaker,Max. power consumption: 2 W, max. sound pressure level: 10 cm: 97 dB. |
| Audio | 1 input (line in), max. input amplitude: 3.3 Vpp, input impedance:4.7 KΩ, interface type: non-equilibrium<br>1 output (line out), max.output amplitude: 3.3 Vpp, output impedance: 100 Ω, interface type: non-equilibrium |
| Alarm | 1 input, 1 output (max. 12 VDC, 30 mA) |
| Reset Key | Yes |
| **Event** | |
| Basic Event | Motion detection (support alarm triggering by specified target types (human and vehicle)),video tampering alarm,exception |
| Smart Event | Line crossing detection, intrusion detection(support alarm triggering by specified target types (human and vehicle)) |
| Linkage | Upload to FTP/memory card, send email, notify surveillance center, trigger recording, trigger capture, audible warning, strobe light flashing |
| **General** | |
| Power | 12 VDC ± 25%, 0.83 A, max. 10 W,Ø5.5 mm coaxial power plug,reverse polarity protection,<br>PoE: IEEE 802.3af, Class 3, max. 11.5 W |
| Material | Base: Metal , cover: Metal |
| Dimension | Ø138.6 mm × 125 mm (Ø5.46" × 4.9") |
| Package Dimension | 170 mm × 170 mm × 160 mm (6.7" × 6.7" × 6.3") |
| Weight | Approx. 808 g (1.781 lb.) |
| With Package Weight | Approx. 1050 g (2.315 lb.) |
| Storage Conditions | -30 °C to 60 °C (-22 °F to 140 °F). Humidity 95% or less (non-condensing) |

| | |
|---|---|
| Startup and Operating Conditions | -30 °C to 60 °C (-22 °F to 140 °F). Humidity 95% or less (non-condensing) |
| Language | English, Turkish, Polish, Romanian, Czech, Slovak, Traditional Chinese, Thai, Vietnamese, Croatian, Slovenian, Serbian, Ukrainian |
| General Function | Heartbeat,anti-banding,password protection,password reset via email |
| Flashing Light | /SRB model: Red and Blue Light<br>/SL model: White Light |
| **Approval** | |
| EMC | CE-EMC: EN 55032:2015+A1:2020, EN 50130-4:2011+A1:2014, EN IEC 61000-3-2:2019+A1:2021, EN 61000-3-3:2013+A1:2019+A2:2021 |
| Safety | CB: IEC 62368-1:2014+A11,<br>CE-LVD: EN 62368-1:2014/A11:2017 |
| Environment | CE-RoHS: 2011/65/EU,<br>WEEE: 2012/19/EU,<br>Reach: Regulation (EC) No 1907/2006 |
| Protection | IP67:IEC 60529-2013 |

## ▪ Typical Application

Recommended Scenarios:The Dual-lens panoramic camera is ideal for large-scale application Scenarios, such as parks, parking lots, intersections, roads, stadiums, and plantations.
Recommended installation height of the camera: above 3 m (9.84 ft.).

Recommended physical distance between the object and camera lens:8 to 12 m (26.24 ft. to 39.37 ft.).

Recommended vertical angle of the camera lens: 68° to 75°.

## ▪ Dimension

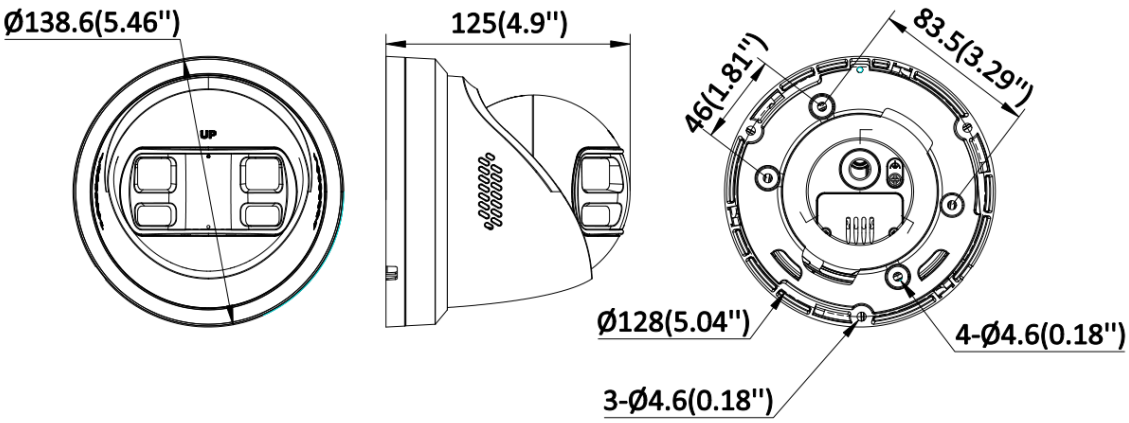


Unit: mm [inch]

## ▪ Accessory

## ▪ Optional

| DS-1271ZJ-140 | DS-1275ZJ-SUS | DS-1276ZJ-SUS | DS-1275ZJ-S-SUS | DS-220AZJ-145-WA |
|---|---|---|---|---|
| | | | | |
| **DS-1273ZJ-140** | **DS-1476ZJ-SUS** | **DS-1475ZJ-SUS** | **DS-1273ZJ-140B** | **DS-1280ZJ-PT6** |
| | | | | |

## ▪ Installation Methods

| Pendant Mounting DS-1271ZJ-140+DS-1280ZJ-PT6 | Vertical Pole Mounting DS-1275ZJ-SUS+DS-1273ZJ-140 | Vertical Pole Mounting DS-1275ZJ-S-SUS+DS-220AZJ-145-WA | Vertical Pole Mounting DS-1475ZJ-SUS+DS-220AZJ-145-WA | Corner Mounting DS-1276ZJ-SUS+DS-1273ZJ-140+DS-1280ZJ-PT6 |
|---|---|---|---|---|
| 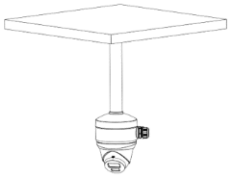 | 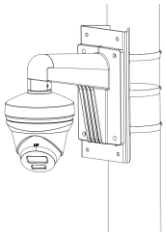 | | | 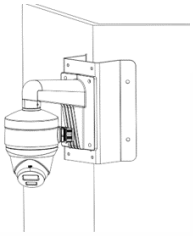 |
| **Corner Mounting DS-1476ZJ-SUS+DS-220AZJ-145-WA** | **Wall Mounting DS-220AZJ-145-WA** | **Wall Mounting DS-1273ZJ-140+DS-1280ZJ-PT6** | **Wall Mounting DS-1273ZJ-140B** | **Junction Box DS-1280ZJ-PT6** |
| | | 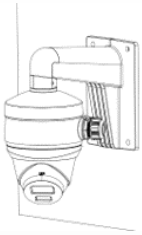 | | |

See Far, Go Further

www.hikvision.com
support@hikvision.com

© Hangzhou Hikvision Digital Technology Co., Ltd. Unless otherwise agreed, Hikvision makes no warranties, express or implied. We reserve the right to introduce modifications without notice.