HIKVISION

DS-2CD3363G2P-LISU/SL
6 MP Panoramic Fixed Turret Network Camera

- 180° Field of view
- High quality imaging with 6 MP resolution
- Support Person and Vehicle Detection
- Smart Hybrid Light: advanced technology with long range
- Efficient H.265+ compression technology
- Support on-board storage up to 512 GB (SD card slot)
- Provide real-time security via built-in two-way audio
- Water and dust resistant (IP67)
- Built-in Microphone
- Active strobe light and audio alarm to warn intruders off

▪ Specification

Camera	
Image Sensor	1/2.5" Progressive Scan CMOS
Max. Resolution	3632 × 1632
Min. Illumination	Color: 0.005 Lux @ (F1.6, AGC ON),0 Lux with light
Shutter Time	1 s to 1/100,000 s
Day & Night	IR cut filter
Angle Adjustment	Pan: 0° to 360°,tilt: 0° to 75°,rotate: 0° to 360°
Lens	
Lens Type	Fixed focal lens, 2.8 mm
Focal Length & FOV	2.8 mm, horizontal FOV 180°, vertical FOV 77°
Lens Mount	M12
Iris Type	Fixed
Aperture	F1.6
Pixel Density	
DORI	2.8 mm, D: 42 m, O: 16 m, R: 8 m, I: 4 m
Illuminator	
Supplement Light Type	IR,White Light
Supplement Light Range	Up to 30 m
Smart Supplement Light	Yes
IR Wavelength	850 nm
Video	
Main Stream	50 Hz: 20 fps (3632 × 1632) 60 Hz: 20 fps (3632 × 1632)
Sub-Stream	50 Hz: 20 fps (1200×536, 960 × 432) 60 Hz: 20 fps (1200×536, 960 × 432)
Video Compression	Main stream: H.265+/H.265/H.264+/H.264, Sub-stream: H.265/H.264/MJPEG
Video Bit Rate	32 Kbps to 16 Mbps
H.264 Type	Baseline Profile,Main Profile,High Profile
H.265 Type	Main Profile
Bit Rate Control	CBR,VBR
Scalable Video Coding (SVC)	H.264 and H.265 encoding
Region of Interest (ROI)	5 fixed regions for main stream
Audio	
Audio Type	Mono sound
Audio Compression	G.711/G.722.1/G.726/MP2L2/PCM/AAC-LC
Audio Bit Rate	64 Kbps (G.711)/16 Kbps (G.722.1)/16 Kbps (G.726)/32 to 160 Kbps (MP2L2)/16 to 64 Kbps (AAC-LC)
Audio Sampling Rate	8 kHz/16 kHz
Environment Noise Filtering	Yes
Network	
Protocols	TCP/IP, ICMP, DHCP, DNS, HTTP, RTP, RTSP, RTCP, NTP, IPv4, IPv6, IGMP, UDP, QoS, FTP, SMTP
Simultaneous Live View	Up to 6 channels
API	ONVIF (Profile S, Profile T, Profile G),ISAPI,SDK

User/Host	Up to 32 users 3 user levels: administrator, operator, and user
Security	Password protection, complicated password, watermark, basic and digest authentication for HTTP, WSSE and digest authentication for Open Network Video Interface, security audit log, host authentication (MAC address)
Client	iVMS-4200,Hik-Connect
Web Browser	Plug-in required live view: IE 11, Local service: Chrome 80+, Firefox 80+, Edge 89+
Image	
Image Settings	Rotate mode,saturation,brightness,contrast,sharpness,gain,white balance,adjustable by client software or web browser
Day/Night Switch	Day,Night,Auto,Schedule
Wide Dynamic Range (WDR)	120 dB
SNR	≥ 52 dB
Image Enhancement	BLC,HLC,3D DNR
Privacy Mask	4 programmable polygon privacy masks
Interface	
Ethernet Interface	1 RJ45 10 M/100 M self-adaptive Ethernet port
On-Board Storage	Built-in memory card slot, support microSD/microSDHC/microSDXC card, up to 512 GB
Built-in Microphone	Yes,1 built-in microphone
Built-in Speaker	Yes, 1 built-in speaker,Max. power consumption: 2 W, max. sound pressure level: 10 cm: 97 dB.
Audio	1 input (line in), max. input amplitude: 3.3 Vpp, input impedance:4.7 KΩ, interface type: non-equilibrium 1 output (line out), max.output amplitude: 3.3 Vpp, output impedance: 100 Ω, interface type: non-equilibrium
Alarm	1 input, 1 output (max. 12 VDC, 30 mA)
Reset Key	Yes
Event	
Basic Event	Motion detection (support alarm triggering by specified target types (human and vehicle)),video tampering alarm,exception
Smart Event	Line crossing detection, intrusion detection, region entrance detection, region exiting detection, unattended baggage detection, object removal detection(support alarm triggering by specified target types (human and vehicle))
Linkage	Upload to FTP/memory card, send email, notify surveillance center, trigger recording, trigger capture, audible warning, strobe light flashing
General	
Power	12 VDC ± 25%, 0.83 A, max. 10 W,Ø5.5 mm coaxial power plug,reverse polarity protection, PoE: IEEE 802.3af, Class 3, max. 11.5 W
Dimension	Ø138.6 mm × 125 mm (Ø5.46" × 4.9")
Package Dimension	170 mm × 170 mm × 160 mm (6.7" × 6.7" × 6.3")
Weight	Approx. 808 g (1.781 lb.)
With Package Weight	Approx. 1050 g (2.315 lb.)
Storage Conditions	-30 °C to 60 °C (-22 °F to 140 °F). Humidity 95% or less (non-condensing)

Startup and Operating Conditions	-30 °C to 60 °C (-22 °F to 140 °F). Humidity 95% or less (non-condensing)
Language	English, Turkish, Polish, Romanian, Czech, Slovak, Traditional Chinese, Thai, Vietnamese, Croatian, Slovenian, Serbian, Ukrainian
General Function	Heartbeat,anti-banding,password protection,password reset via email
Flashing Light	White Light
Approval	
EMC	CE-EMC: EN 55032:2015+A1:2020, EN 50130-4:2011+A1:2014, EN IEC 61000-3-2:2019+A1:2021, EN 61000-3-3:2013+A1:2019+A2:2021
Safety	CB: IEC 62368-1:2014+A11, CE-LVD: EN 62368-1:2014/A11:2017
Environment	CE-RoHS: 2011/65/EU, WEEE: 2012/19/EU, Reach: Regulation (EC) No 1907/2006
Protection	IP67:IEC 60529-2013

▪ Typical Application

Recommended Scenarios:The Dual-lens panoramic camera is ideal for large-scale application Scenarios, such as parks, parking lots, intersections, roads, stadiums, and plantations.
Recommended installation height of the camera: above 3 m (9.84 ft.).

Recommended physical distance between the object and camera lens:8 to 12 m (26.24 ft. to 39.37 ft.).

Recommended vertical angle of the camera lens: 68° to 75°.

▪ Dimension

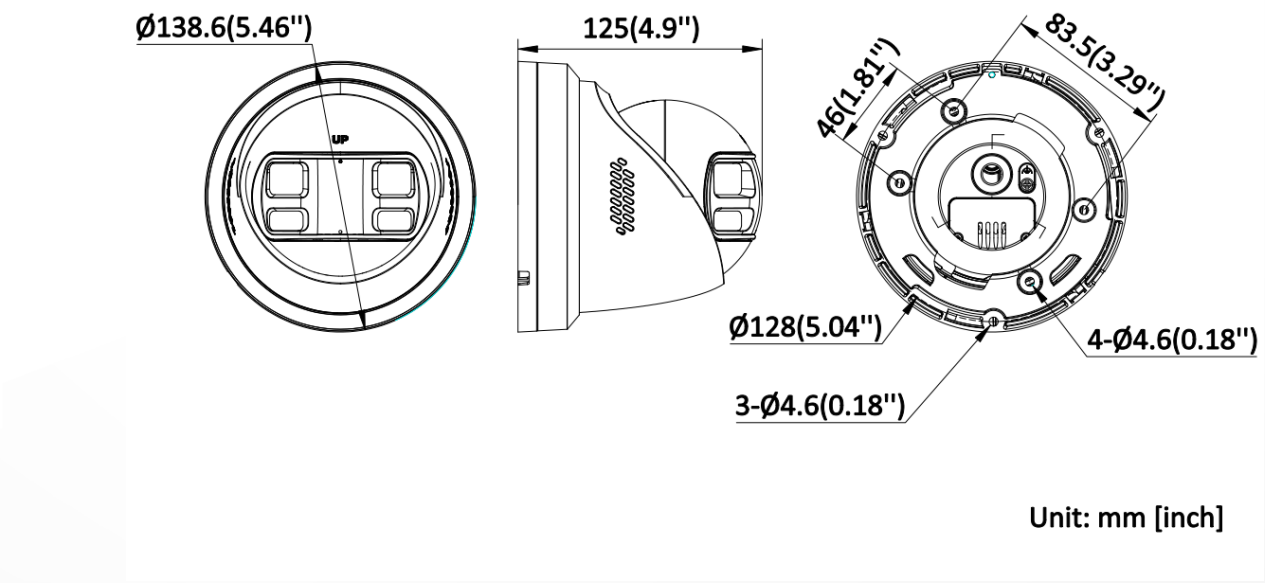

▪ Accessory

▪ Optional

DS-1271ZJ-140	DS-1273ZJ-140	DS-1276ZJ-SUS	DS-1275ZJ-SUS	DS-1273ZJ-140B
DS-1275ZJ-S-SUS	**DS-1475ZJ-SUS**	**DS-1280ZJ-PT6**	**DS-1476ZJ-SUS**	**DS-220AZJ-145-WA**

▪ Installation Methods

Pendant Mounting DS-1271ZJ-140+DS-1280ZJ-PT6	Wall Mounting DS-1273ZJ-140+DS-1280ZJ-PT6	Wall Mounting DS-1273ZJ-140B	Wall Mounting DS-220AZJ-145-WA	Corner Mounting DS-1276ZJ-SUS+DS-1273ZJ-140+DS-1280ZJ-PT6
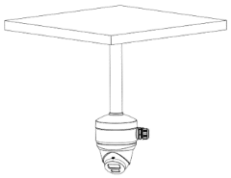	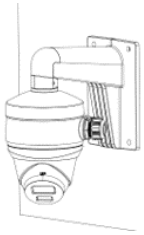			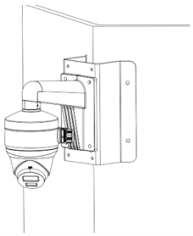
Corner Mounting DS-1476ZJ-SUS+DS-220AZJ-145-WA	**Vertical Pole Mounting DS-1275ZJ-SUS+DS-1273ZJ-140**	**Vertical Pole Mounting DS-1275ZJ-S-SUS+DS-220AZJ-145-WA**	**Vertical Pole Mounting DS-1475ZJ-SUS+DS-220AZJ-145-WA**	**Junction Box DS-1280ZJ-PT6**
	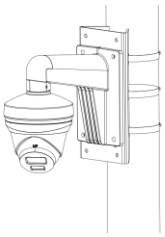			

See Far, Go Further

www.hikvision.com
support@hikvision.com

© Hangzhou Hikvision Digital Technology Co., Ltd. Unless otherwise agreed, Hikvision makes no warranties, express or implied. We reserve the right to introduce modifications without notice.