Passive Ceiling Speaker

Quick Start Guide

About this Document

- This Document includes instructions for using and managing the Product. Pictures, charts, images and all other information hereinafter are for description and explanation only.
- The information contained in the Document is subject to change, without notice, due to firmware updates or other reasons. Please find the latest version of the Document at the Hikvision website (***https://www.hikvision.com***). Unless otherwise agreed, Hangzhou Hikvision Digital Technology Co., Ltd. or its affiliates (hereinafter referred to as "Hikvision") makes no warranties, express or implied.
- Please use the Document with the guidance and assistance of professionals trained in supporting the Product.

About this Product

This product can only enjoy the after-sales service support in the country or region where the purchase is made.

Acknowledgment of Intellectual Property Rights

- Hikvision owns the copyrights and/or patents related to the technology embodied in the Products described in this Document, which may include licenses obtained from third parties.
- Any part of the Document, including text, pictures, graphics, etc., belongs to Hikvision. No part of this Document may be excerpted, copied, translated, or modified in whole or in part by any means without written permission.
- HIKVISION and other Hikvision's trademarks and logos are the properties of Hikvision in various jurisdictions.
- Other trademarks and logos mentioned are the properties of their respective owners.

LEGAL DISCLAIMER

- TO THE MAXIMUM EXTENT PERMITTED BY APPLICABLE LAW, THIS DOCUMENT AND THE PRODUCT DESCRIBED, WITH ITS HARDWARE, SOFTWARE AND FIRMWARE, ARE PROVIDED "AS IS" AND "WITH ALL FAULTS AND ERRORS". HIKVISION MAKES NO WARRANTIES, EXPRESS OR IMPLIED, INCLUDING WITHOUT LIMITATION, MERCHANTABILITY, SATISFACTORY QUALITY, OR FITNESS FOR A PARTICULAR PURPOSE. THE USE OF THE PRODUCT BY YOU IS AT YOUR OWN RISK. IN NO EVENT WILL HIKVISION BE LIABLE TO YOU FOR ANY SPECIAL, CONSEQUENTIAL, INCIDENTAL, OR INDIRECT DAMAGES, INCLUDING, AMONG OTHERS, DAMAGES FOR LOSS OF BUSINESS PROFITS, BUSINESS INTERRUPTION, OR LOSS OF DATA, CORRUPTION OF SYSTEMS, OR LOSS OF DOCUMENTATION, WHETHER BASED ON BREACH OF CONTRACT, TORT (INCLUDING NEGLIGENCE), PRODUCT LIABILITY, OR OTHERWISE, IN CONNECTION WITH THE USE OF THE PRODUCT, EVEN IF HIKVISION HAS BEEN ADVISED OF THE POSSIBILITY OF SUCH DAMAGES OR LOSS.
- YOU ACKNOWLEDGE THAT THE NATURE OF THE INTERNET PROVIDES FOR INHERENT SECURITY RISKS, AND HIKVISION SHALL NOT TAKE ANY RESPONSIBILITIES FOR ABNORMAL OPERATION, PRIVACY LEAKAGE OR OTHER DAMAGES RESULTING FROM CYBER-ATTACK, HACKER ATTACK, VIRUS INFECTION, OR OTHER INTERNET SECURITY RISKS; HOWEVER, HIKVISION WILL PROVIDE TIMELY TECHNICAL SUPPORT IF REQUIRED.
- YOU AGREE TO USE THIS PRODUCT IN COMPLIANCE WITH ALL APPLICABLE LAWS, AND YOU ARE SOLELY RESPONSIBLE FOR ENSURING THAT YOUR USE CONFORMS TO THE APPLICABLE LAW. ESPECIALLY, YOU ARE RESPONSIBLE, FOR USING THIS PRODUCT IN A MANNER THAT DOES NOT

INFRINGE ON THE RIGHTS OF THIRD PARTIES, INCLUDING WITHOUT LIMITATION, RIGHTS OF PUBLICITY, INTELLECTUAL PROPERTY RIGHTS, OR DATA PROTECTION AND OTHER PRIVACY RIGHTS. YOU SHALL NOT USE THIS PRODUCT FOR ANY PROHIBITED END-USES, INCLUDING THE DEVELOPMENT OR PRODUCTION OF WEAPONS OF MASS DESTRUCTION, THE DEVELOPMENT OR PRODUCTION OF CHEMICAL OR BIOLOGICAL WEAPONS, ANY ACTIVITIES IN THE CONTEXT RELATED TO ANY NUCLEAR EXPLOSIVE OR UNSAFE NUCLEAR FUEL-CYCLE, OR IN SUPPORT OF HUMAN RIGHTS ABUSES.

- IN THE EVENT OF ANY CONFLICTS BETWEEN THIS DOCUMENT AND THE APPLICABLE LAW, THE LATTER PREVAILS.

© Hangzhou Hikvision Digital Technology Co., Ltd. All rights reserved.

Safety Information

Please read all the safety information carefully before using.

- In the use of the product, you must be in strict compliance with the electrical safety regulations of the nation and region.
- Device powered by Safety Extra-Low Voltage (SELV): The power source should meet limited power source or PS2 requirements according to IEC 60950-1 or IEC 62368-1 standard.
- For the device powered on and off only by power plug and socket-outlet, the socket-outlet shall be installed near the device and easily accessible.
- This equipment shall be installed incorporated with UPS to avoid the risk of restart.
- Use the power adapter that can work normally at an altitude over 2000 meters above sea level.
- Do not dispose of the battery into fire or a hot oven, or mechanically crush or cut the battery, which may result in an explosion.
- Do not leave the battery in an extremely high temperature surrounding environment, which may result in an explosion or the leakage of flammable liquid or gas.
- Do not subject the battery to extremely low air pressure, which may result in an explosion or the leakage of flammable liquid or gas.
- Dispose of used batteries according to the instructions.
- For the device with sticker or

, pay attention to the following cautions:
  CAUTION: Hot parts! Do not touch. Burned fingers when handling the parts. Wait one-half hour after switching off before handling the parts.
  This sticker is to indicate that the marked item can be hot and should not be touched without taking care. For device with this sticker, this device is intended for installation in a restricted access location, access can only be gained by service persons or by users who have been instructed about the reasons for the restrictions applied to the location and about any precautions that shall be taken.
- Do not install devices for professional use in locations where children are likely to appear.
- If the device needs to be installed on the wall or ceiling, install the device according to the instructions in Quick Start Guide. Attach the device properly to the floor/wall in accordance with the installation instructions to prevent injury.
- For the device with supplement light (refer to datasheet for details):
  Possibly hazardous optical radiation emitted from this product.
  DO NOT stare at operating light source. May be harmful to the eyes.
  Wear appropriate eye protection or DO NOT turn on the light when you assemble, install or maintain the device.
- For the battery with + and - signs, + identifies the positive terminals of the device which is used with or generates direct current, and - identifies the negative terminals of the device which is used with or generates direct current.
- Do not touch the bare components (such as the metal contacts of the inlets) and wait for at least 5 minutes, since electricity may still exist after the device is powered off.
- No naked flame sources, such as lighted candles, should be placed on the device.
- Never place the device in an unstable location. The device may fall, causing serious personal injury or death.
- If the device needs to be wired by yourself, select the corresponding wire to supply power

according to the electric parameters labeled on the device. Strip off wire with a standard wire stripper at corresponding position. To avoid serious consequences, the length of stripped wire shall be appropriate, and conductors shall not be exposed.

- Make sure that the power has been disconnected before you wire, install, or disassemble the device.
- If smoke, odor, or noise arises from the device, immediately turn off the power, unplug the power cable, and contact the service center.

Table of Contents

Chapter 1 Introduction 1
1.1 Features 1
1.2 Specification 2
1.3 Dimensions 2
1.4 Interface and Knob 3
1.5 Application Scene 4
Chapter 2 Installation 5
2.1 Before You Install 5
2.2 Ceiling Mounting 5

Chapter 1 Introduction

1.1 Features

Constant Impedance Passive Ceiling Speaker Product Features:

- 6.5" woofer + 1.2" tweeter coaxial design: Delivers rich mid-low frequencies with precise sound imaging and immersive audio reproduction.
- Advanced driver materials. Woofer: Wool fiber cone enhances vocal clarity and midrange naturalness. Tweeter: Imported natural silk diaphragm ensures smooth high-frequency extension and detailed reproduction.
- Tool-free installation system: Front-panel terminals and ergonomic handles simplify wiring. Reinforced bracket assembly and magnetic frameless grille ensure secure ceiling mounting. Vibration-resistant structure prevents resonance at high volumes.
- Aesthetic integration: Black/white magnetic grille options blend seamlessly into ceilings. Optimized for standard room heights with wide dispersion coverage.

Constant Voltage/Impedance Passive Ceiling Speaker Features:

- Dual-Mode operation: Constant impedance mode: Precision audio for focused spaces. Constant voltage mode: Stable coverage for large venues. A single device is compatible with multi-scenario applications, unlocking full acoustic potential.
- 6.5" woofer + 1.2" tweeter coaxial design: Delivers rich mid-low frequencies with precise sound imaging and immersive audio reproduction.
- Advanced driver materials. Woofer: Wool fiber cone enhances vocal clarity and midrange naturalness. Tweeter: Imported natural silk diaphragm ensures smooth high-frequency extension and detailed reproduction.
- Tool-free installation system: Front-panel terminals and ergonomic handles simplify wiring. Reinforced bracket assembly and magnetic frameless grille ensure secure ceiling mounting. Vibration-resistant structure prevents resonance at high volumes.
- Aesthetic integration: Black/white magnetic grille options blend seamlessly into ceilings. Optimized for standard room heights with wide dispersion coverage.

Note:
Features vary with models. Please refer to the actual device for details.

1.2 Specification

Table 1-1 Specification

Speaker	
Speaker Unit	6.5" woofer ×1 + 1.2" tweeter ×1
Frequency Response (-10 dB)	85 Hz to 20 kHz
Sensitivity (1 W/1 m)	91.5 dB
Maximum Sound Pressure Level (1 m)	109 dB
Impedance	8 Ω
Rated Power	60 W
Total Harmonic Distortion (THD)	0.30%

1.3 Dimensions

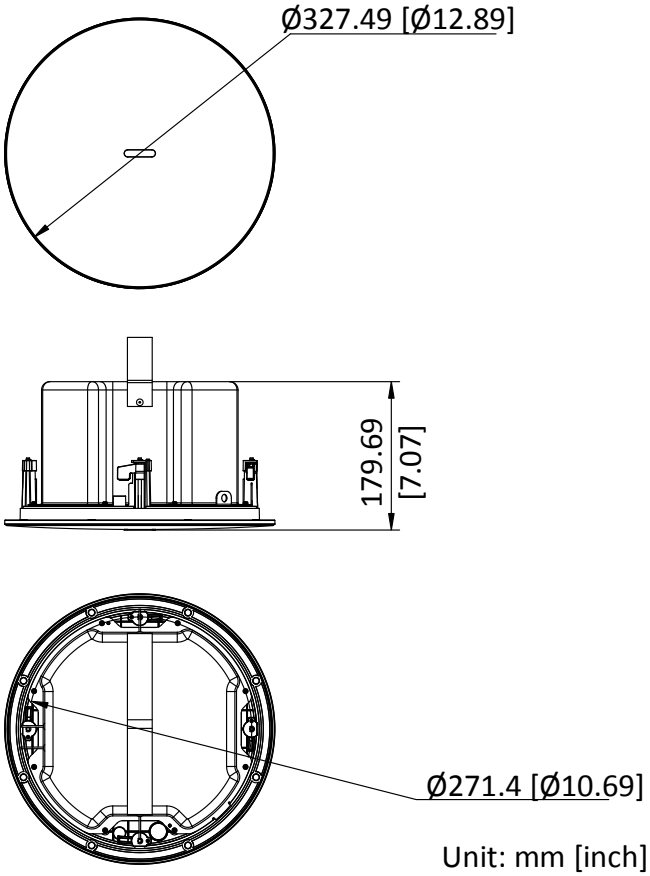

Figure 1-1 Dimension

1.4 Interface and Knob

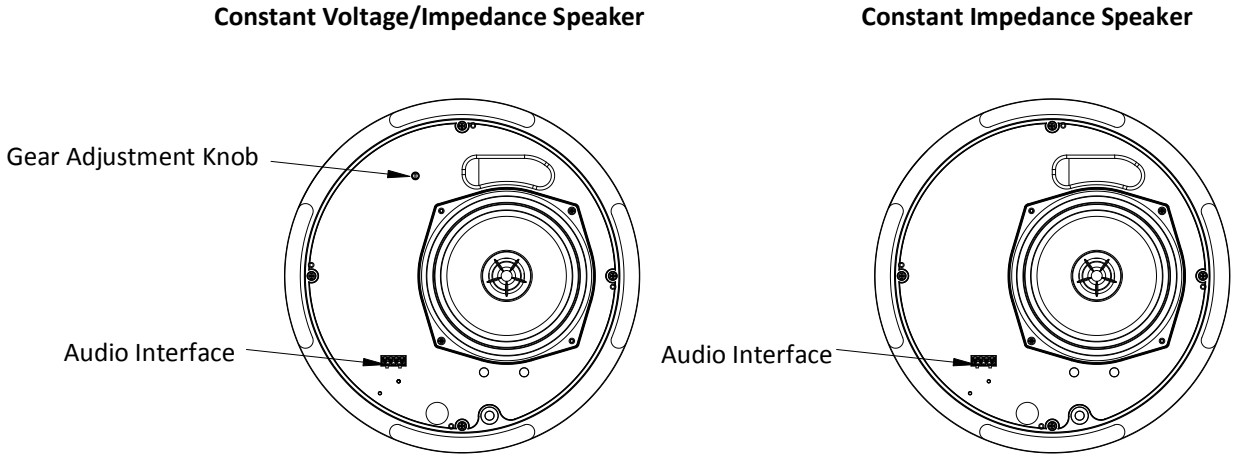

Figure 1-2 Interface and Knob

- Gear Adjustment Knob (Constant voltage/impedance speaker only.):

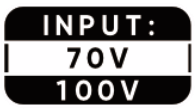

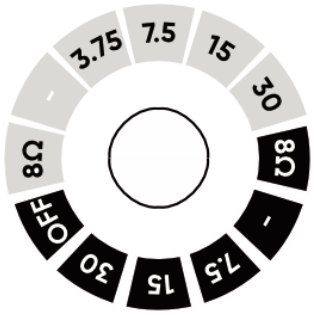

Figure 1-3 Knob

  - 100 V constant voltage input: 30 W/15 W/7.5 W.
  - 70 V constant voltage input: 30 W/15 W/7.5 W/3.75 W.
  - 8 Ω constant impedance input: 8 Ω.
- 4-Pin Phoenix Terminal Input: See "Figure 1-4 Wiring Sequence".

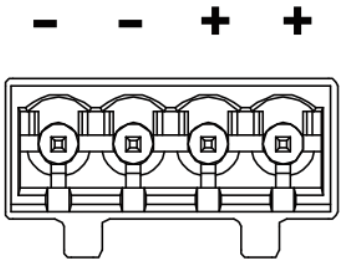

Figure 1-4 Wiring Sequence

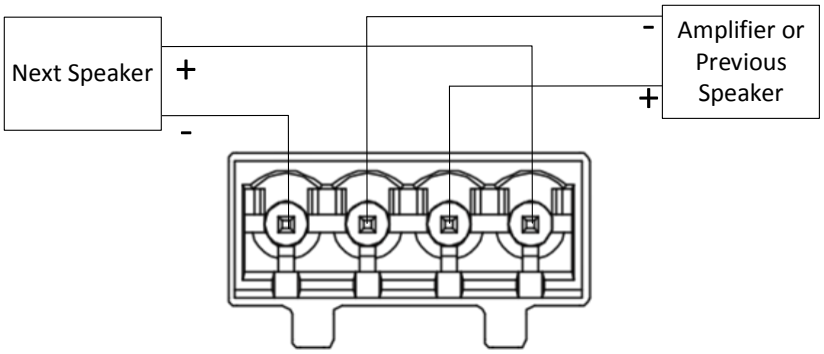

Figure 1-5 Connection 1

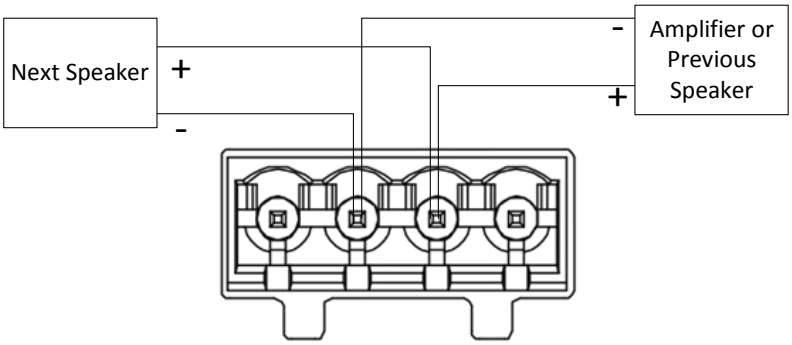

Figure 1-6 Connection 2

1.5 Application Scene

Ideal for conference rooms, classrooms, and training facilities. Compatible with various ceiling types including plasterboard and suspended systems. Provides uniform dispersion with no cabinet resonance.

Chapter 2 Installation

2.1 Before You Install

- Make sure the mounting wall has sufficient thickness, and can withstand at least 4 times the weight of the device and its components.
- Confirm non-concrete ceiling material and drilling feasibility.
- Please check device dimensions before installation. Please reserve enough space for device installation.

2.2 Ceiling Mounting

Step 1 Place the included drilling template on the target ceiling area. Trace the template periphery to mark a 300mm diameter circle for drilling.

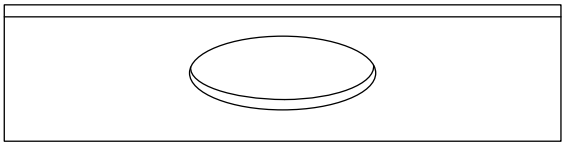

Figure 2-1 Drill Hole

Note:

For the ceiling with a suspended ceiling, you can also choose to remove it before drilling. When drilling in the ceiling, be careful to prevent debris from entering your eyes.

Step 2 Mount guide rail and O-ring.

1. Place the guide rail on the inner side of the ceiling
2. Thread the folded O-ring through the opening, then unfold it and secure the guide rail and O-ring with the included 2 screws.

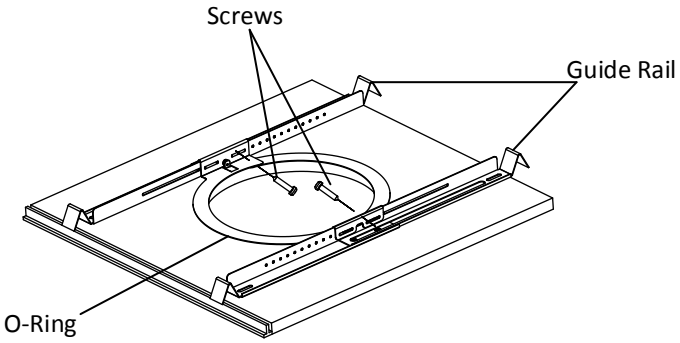

Figure 2-2 Mount Guide Rail and O-Ring

Step 3 Place the speaker on the perforated ceiling.

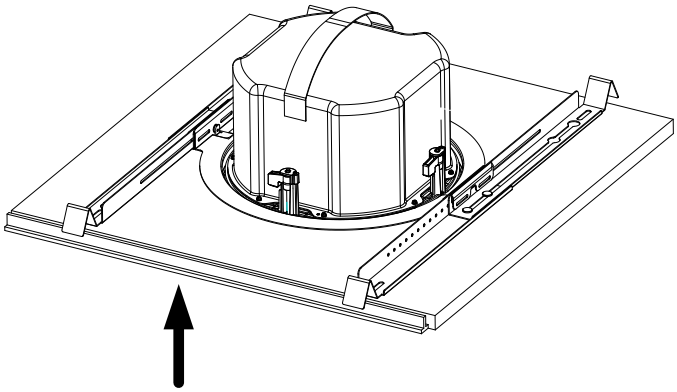

Figure 2-3 Place Speaker

Step 4 Rotate the clamping claws with a screwdriver to tighten the mounting.

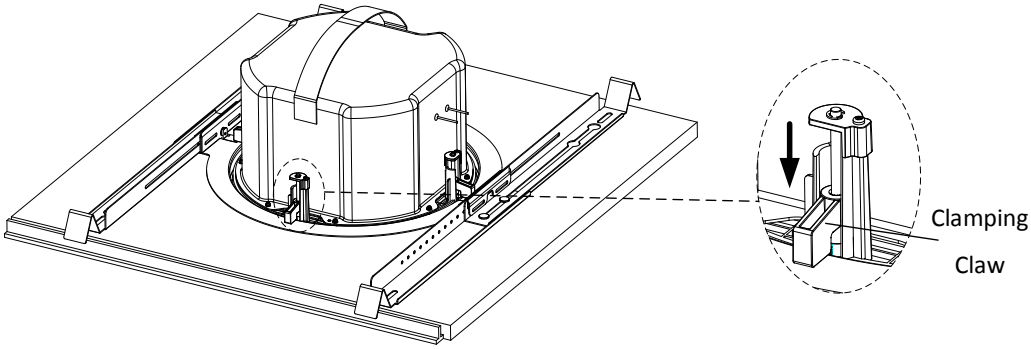

Figure 2-4 Rotate Clamping Claws

Step 5 Connect the device cables. Refer to "1.4 Interface and Knob" for device interfaces, and route the cables through the cable outlet.

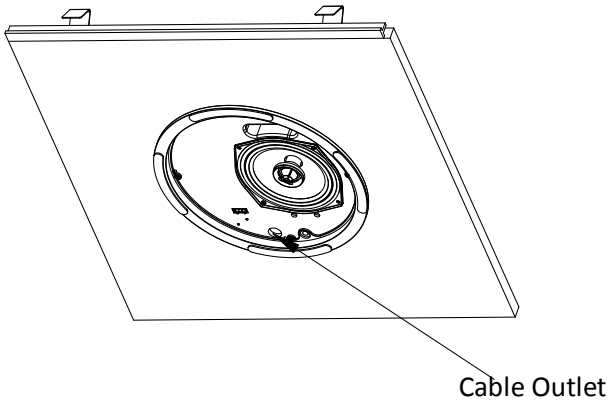

Figure 2-5 Connect Cables

Note:

For the ceiling with a suspended ceiling, you can also choose to remove it before drilling. When drilling in the ceiling, be careful to prevent debris from entering your eyes.

Step 6 Insert the plastic screws of the top cap into the basin frame at the bottom of the device, then secure the top cap to the device magnetically.

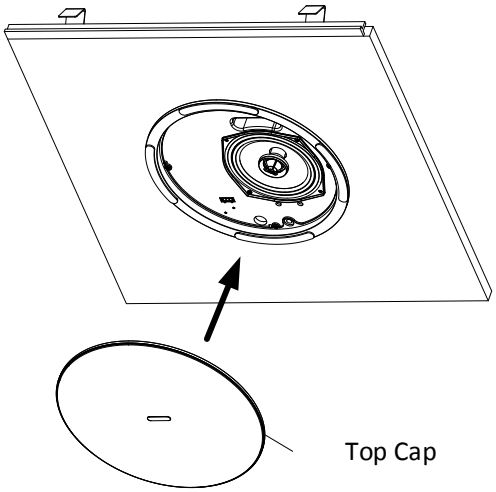

Figure 2-6 Mount Top Cap

See Far, Go Further

UD43128B