HIKVISION

DS-2CD1127G3-LIU/SL
2 MP ColorVu 3.0 Fixed Dome Network Camera

ColorVu 3.0

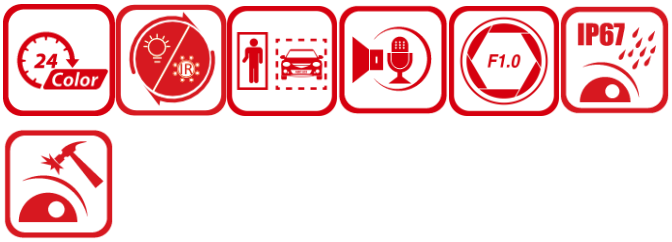

- HikAI-ISP for excellent noise reduction effect
- Super clear 24/7 colorful imaging with ColorVu 3.0 technology
- Motion Detection 3.0, more accurate on person and vehicle classification
- /SL/SRB: Provide real-time security via built-in two-way audio and strobe light alarm
- -F: Support on-board storage up to 512 GB (SD card slot) (Optional)
- Smart Hybrid Light: integrates IR and white lights, 3 supplemental lighting modes
- Water and dust resistant (IP67) and vandal resistant (IK08)

▪ Specification

Camera	
Image Sensor	1/2.8" Progressive Scan CMOS
Max. Resolution	1920 × 1080
Min. Illumination	Color: 0.0005 Lux @ (F1.0, AGC ON),0 Lux with light
Shutter Time	1 s to 1/100,000 s
Day & Night	IR cut filter
Angle Adjustment	Pan: 0° to 355°,tilt: 0° to 75°,rotate: 0° to 355°
Lens	
Lens Type	Fixed focal lens, 2.8 and 4 mm optional
Focal Length & FOV	2.8 mm, horizontal FOV 106°, vertical FOV 56°, diagonal FOV 129° 4 mm, horizontal FOV 88°, vertical FOV 47°, diagonal FOV 103°
Lens Mount	M12
Iris Type	Fixed
Aperture	F1.0
Depth of Field	2.8 mm: 1.2 m to ∞ 4 mm: 1.3 m to ∞
DORI	
DORI	2.8 mm, D: 44 m, O: 17 m, R: 8 m, I: 4 m 4 mm, D: 53 m, O: 21 m, R: 10 m, I: 5 m
Illuminator	
Supplement Light Type	IR,White Light
Supplement Light Range	Up to 30 m
Smart Supplement Light	Yes
IR Wavelength	850 nm
Video	
Main Stream	50 Hz: 25 fps (1920 × 1080, 1280 × 720) 60 Hz: 30 fps (1920 × 1080, 1280 × 720)
Sub-Stream	50 Hz: 25 fps (640 × 480, 640 × 360) 60 Hz: 30 fps (640 × 480, 640 × 360)
Video Compression	Main stream: H.265+/H.265/H.264+/H.264, Sub-stream: H.265/H.264/MJPEG
Video Bit Rate	32 Kbps to 8 Mbps
H.264 Type	Baseline Profile,Main Profile,High Profile
H.265 Type	Main Profile
Bit Rate Control	CBR,VBR
Scalable Video Coding (SVC)	H.264 and H.265 encoding
Region of Interest (ROI)	1 fixed regions for main stream and sub-stream
Audio	
Audio Type	Mono sound
Audio Compression	G.711ulaw/G.711alaw/G.722.1/G.726/MP2L2/PCM/AAC-LC/MP3
Audio Bit Rate	64 Kbps (G.711)/16 Kbps (G.722.1)/16 Kbps (G.726)/32 to 160 Kbps (MP2L2)/16 to 64 Kbps (AAC-LC)
Audio Sampling Rate	8 kHz/16 kHz
Environment Noise Filtering	Yes

Network	
Protocols	TCP/IP, ICMP, DHCP, DNS, HTTP, RTP, RTSP, RTCP, NTP, IGMP, UDP, QoS, FTP, SMTP, UPnP
Simultaneous Live View	Up to 6 channels
API	Open Network Video Interface (Profile S, Profile T, Profile G (only -F model supports)),ISAPI,SDK
Security	Password protection, complicated password, watermark, basic and digest authentication for HTTP, WSSE and digest authentication for Open Network Video Interface, security audit log, host authentication (MAC address)
User/Host	Up to 32 users 3 user levels: administrator, operator, and user
Client	iVMS-4200,Hik-Connect
Web Browser	Plug-in free live view: Chrome 57.0+, Firefox 52.0+, Edge 89+, Safari 11 Local service: Chrome 57.0+, Firefox 52.0+, Edge 89+
Image	
Image Settings	Rotate mode,saturation,brightness,contrast,sharpness,gain,white balance,AGC,adjustable by client software or web browser
Day/Night Switch	Day,Night,Auto,Schedule
Wide Dynamic Range (WDR)	120 dB
SNR	≥ 52 dB
Image Enhancement	BLC,HLC,3D DNR
Privacy Mask	4 programmable polygon privacy masks
Transducer	
Transducer Type	NA
Detection Angle	NA
Detection Range	NA
Interface	
Ethernet Interface	1 RJ45 10 M/100 M self-adaptive Ethernet port
On-Board Storage	-F: Built-in memory card slot, support microSD/microSDHC/microSDXC card, up to 512 GB
Built-in Microphone	Yes,1 built-in microphone
Built-in Speaker	NA
Audio	NA
Alarm	NA
Reset Key	-F: Yes
Event	
Basic Event	Motion detection (support alarm triggering by specified target types (person and vehicle)), video tampering alarm, exception
Linkage	Upload to memory card (-F model supports), trigger recording (-F model supports), upload to FTP,notify surveillance center,send email,trigger capture
General	
Power	12 VDC ± 25%, 0.5 A, max. 6 W,Ø5.5 mm coaxial power plug,reverse polarity protection, PoE: IEEE 802.3af, Class 3, max. 7.5 W
Material	Base: metal, cover: plastic

Dimension	Ø121.5 mm × 97.6 mm (Ø4.78" × 3.84")
Package Dimension	150 mm × 150 mm × 141 mm (5.91" × 5.91" × 5.55")
Weight	Approx. 550 g (1.2 lb.)
With Package Weight	Approx. 800 g (1.8 lb.)
Storage Conditions	-30 °C to 60 °C (-22 °F to 140 °F). Humidity 95% or less (non-condensing)
Startup and Operating Conditions	-30 °C to 60 °C (-22 °F to 140 °F). Humidity 95% or less (non-condensing)
Language	English, Ukrainian
General Function	Heartbeat, anti-banding, mirror, password protection,password reset by email
Flashing Light	NA
Approval	
EMC	CE-EMC: EN 55032:2015+A1:2020, EN 50130-4:2011+A1:2014, EN IEC 61000-3-2:2019+A1:2021, EN 61000-3-3:2013+A1:2019+A2:2021
Safety	CB: IEC 62368-1:2014+A11
Environment	CE-RoHS: 2011/65/EU, WEEE: 2012/19/EU, Reach: Regulation (EC) No 1907/2006
Protection	IP67:IEC 60529-2013,IK08:IEC 62262:2002

▪ Typical Application

Level	Description
Top-level protection	Hikvision products at this level are equipped for use in areas where professional anti-corrosion protection is a must. Typical application scenarios include coastlines, docks, chemical plants, and more.
Moderate protection	Hikvision products at this level are equipped for use in areas with moderate anti-corrosion demands. Typical application scenarios include coastal areas about 2 kilometers (1.24 miles) away from coastlines, as well as areas affected by acid rain.
No specific protection	Hikvision products at this level are equipped for use in areas where no specific anti-corrosion protection is needed.

▪ Dimension

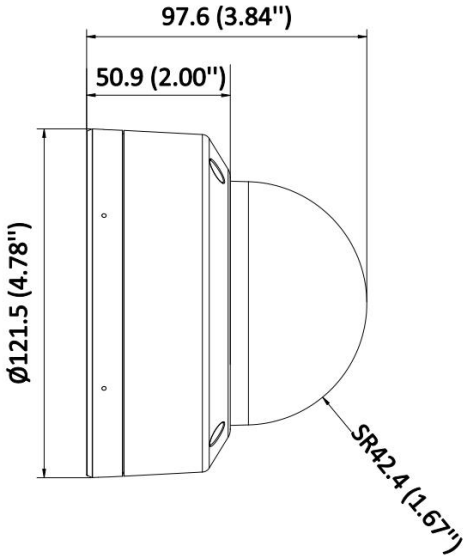

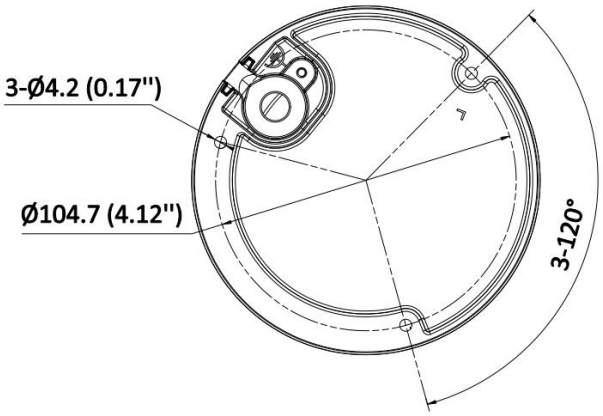

Unit: mm (inch)

▪ Accessory

▪ Optional

DS-1276ZJ-SUS	DS-1272ZJ-120	DS-1275ZJ-S-SUS	DS-1271ZJ-120	DS-1275ZJ-SUS
DS-220AZJ-130-WA	**DS-1476ZJ-SUS**	**DS-4221ZJ-WC**	**DS-1272ZJ-120B**	**DS-220AZJ-145-WA**
DS-1280ZJ-DM46	**DS-1475ZJ-SUS**			

▪ Installation Methods

Corner Mounting DS-1276ZJ-SUS+DS-1272ZJ-120B+DS-1253ZJ-M	Corner Mounting DS-1476ZJ-SUS+DS-220AZJ-145-WA	Wall Mounting DS-1272ZJ-120+DS-1280ZJ-DM46	Wall Mounting DS-220AZJ-130-WA	Wall Mounting DS-1272ZJ-120B
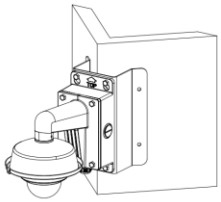	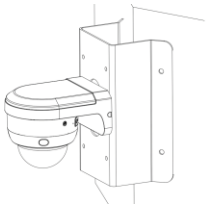	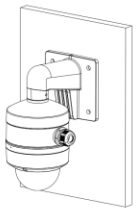	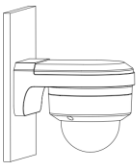	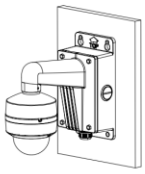
Wall Mounting DS-220AZJ-145-WA	**Vertical Pole Mounting DS-1275ZJ-S-SUS+DS-220AZJ-130-WA**	**Vertical Pole Mounting DS-1275ZJ-SUS+DS-1272ZJ-120+DS-1253ZJ-M**	**Vertical Pole Mounting DS-1475ZJ-SUS+DS-220AZJ-145-WA**	**Pendant Mounting DS-1271ZJ-120+DS-1280ZJ-DM46**
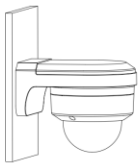		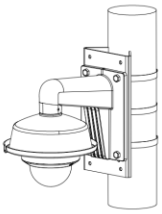		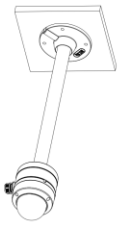
In-Ceiling Mounting DS-4221ZJ-WC	**Junction Box DS-1280ZJ-DM46**			
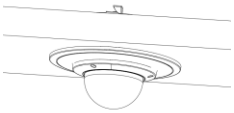	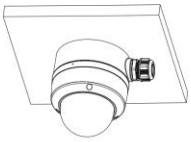			

See Far, Go Further

www.hikvision.com
support@hikvision.com

© Hangzhou Hikvision Digital Technology Co., Ltd. Unless otherwise agreed, Hikvision makes no warranties, express or implied. We reserve the right to introduce modifications without notice.