Explosion-Proof Positioning System Camera

Quick Start Guide

A

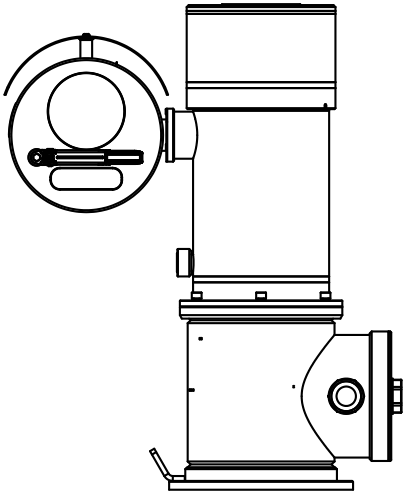

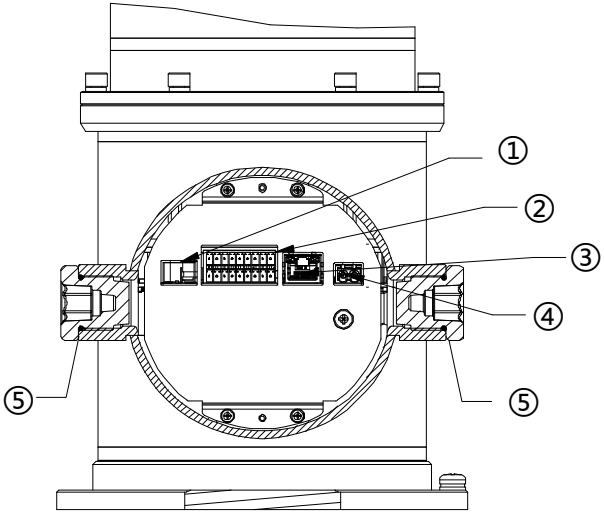

B

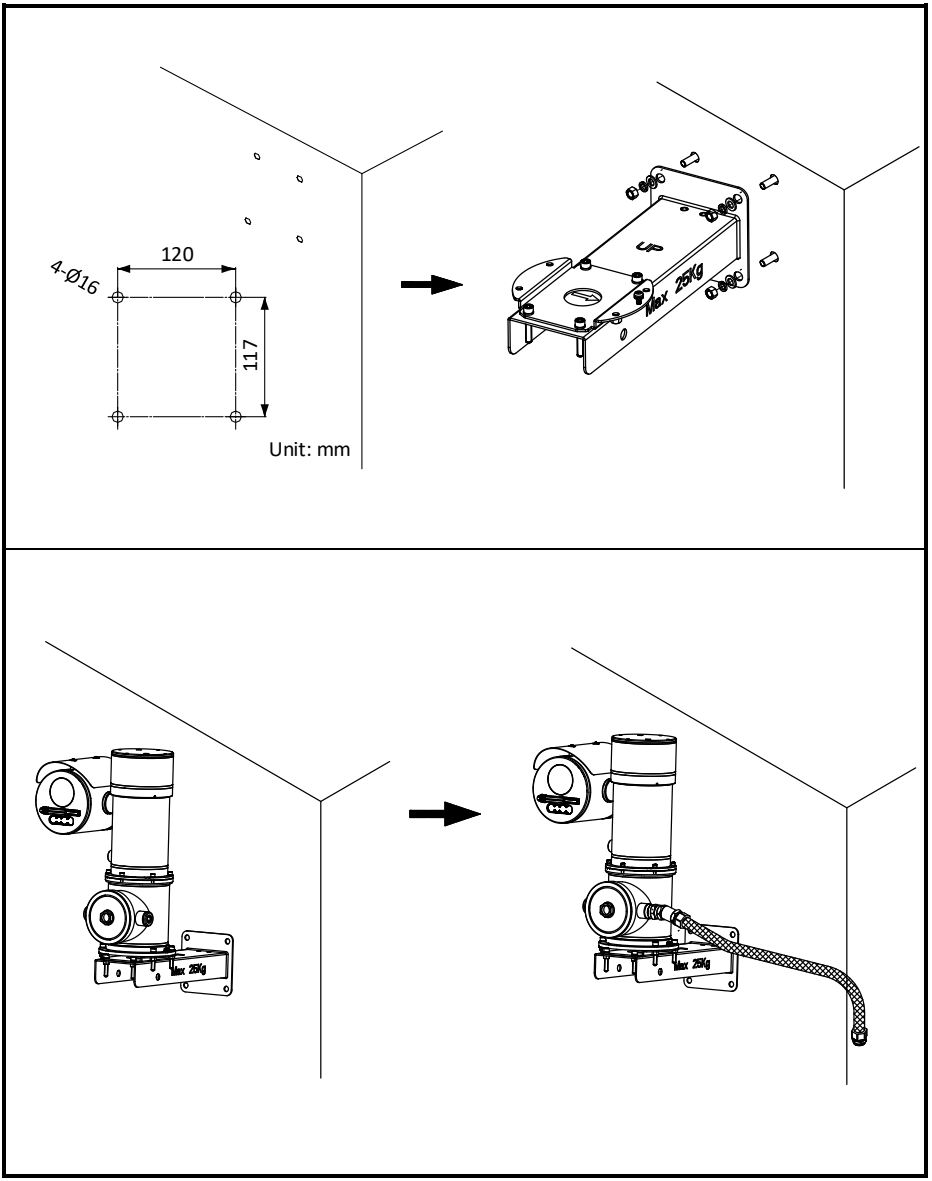

C

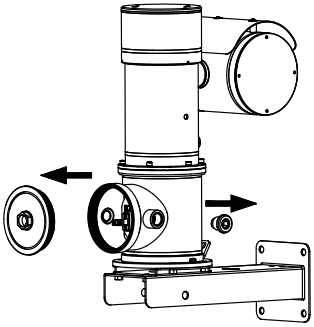

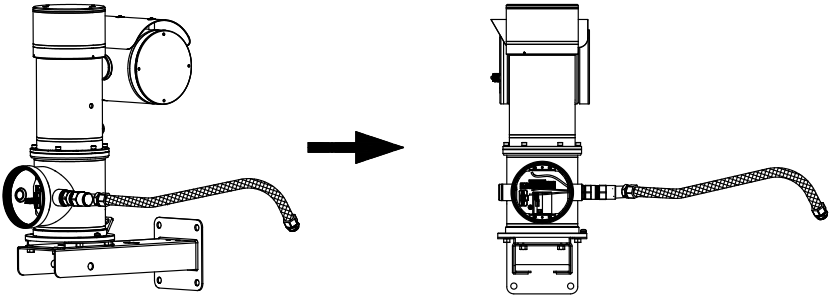

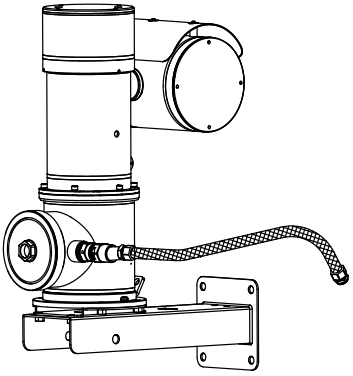

D

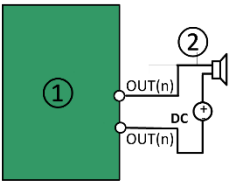
1
2
OUT(n)
DC
OUT(n)

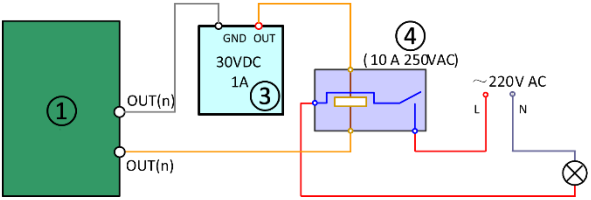
1
OUT(n)
OUT(n)
GND OUT
30VDC
1A
3
4
(10 A 250VAC)
~220V AC
L
N

E

E1

E2

Read this manual before using the product.

Product appearance is for reference only and may differ from the actual product.

Interface (Page 1 - A)

① Optical Fiber
② Alarm & RS-485 interface
③ Network interface
④ Power interface
⑤ Cable Entry (Thread Specification): M25 × 1.5

Install Camera (Page 2 – B)

Alarm Output (Page 4 – D)

① Relay output
② DC load
③ Power supply
④ JQC-3FG Relay

Protective Measures for Outdoor Installation (Page 4 – E1)

Activate and Access Network Camera (Page 4 – E2)

About this Document

- This Document includes instructions for using and managing the Product. Pictures, charts, images and all other information hereinafter are for description and explanation only.
- The information contained in the Document is subject to change, without notice, due to firmware updates or other reasons. Please find the latest version of the Document at the Hikvision website (https://www.hikvision.com). Unless otherwise agreed, Hangzhou Hikvision Digital Technology Co., Ltd. or its affiliates (hereinafter referred to as "Hikvision") makes no warranties, express or implied.
- Please use the Document with the guidance and assistance of professionals trained in supporting the Product.

About this Product

This product can only enjoy the after-sales service support in the country or region where the purchase is made.

Acknowledgment of Intellectual Property Rights

- Hikvision owns the copyrights and/or patents related to the technology embodied in the Products described in this Document, which may include licenses obtained from third parties.
- Any part of the Document, including text, pictures, graphics, etc., belongs to Hikvision. No part of this Document may be excerpted, copied, translated, or modified in whole or in part by any means without written permission.
- HIKVISION and other Hikvision's trademarks and logos are the properties of Hikvision in various jurisdictions.

- Other trademarks and logos mentioned are the properties of their respective owners.

LEGAL DISCLAIMER

- TO THE MAXIMUM EXTENT PERMITTED BY APPLICABLE LAW, THIS DOCUMENT AND THE PRODUCT DESCRIBED, WITH ITS HARDWARE, SOFTWARE AND FIRMWARE, ARE PROVIDED "AS IS" AND "WITH ALL FAULTS AND ERRORS". HIKVISION MAKES NO WARRANTIES, EXPRESS OR IMPLIED, INCLUDING WITHOUT LIMITATION, MERCHANTABILITY, SATISFACTORY QUALITY, OR FITNESS FOR A PARTICULAR PURPOSE. THE USE OF THE PRODUCT BY YOU IS AT YOUR OWN RISK. IN NO EVENT WILL HIKVISION BE LIABLE TO YOU FOR ANY SPECIAL, CONSEQUENTIAL, INCIDENTAL, OR INDIRECT DAMAGES, INCLUDING, AMONG OTHERS, DAMAGES FOR LOSS OF BUSINESS PROFITS, BUSINESS INTERRUPTION, OR LOSS OF DATA, CORRUPTION OF SYSTEMS, OR LOSS OF DOCUMENTATION, WHETHER BASED ON BREACH OF CONTRACT, TORT (INCLUDING NEGLIGENCE), PRODUCT LIABILITY, OR OTHERWISE, IN CONNECTION WITH THE USE OF THE PRODUCT, EVEN IF HIKVISION HAS BEEN ADVISED OF THE POSSIBILITY OF SUCH DAMAGES OR LOSS.
- YOU ACKNOWLEDGE THAT THE NATURE OF THE INTERNET PROVIDES FOR INHERENT SECURITY RISKS, AND HIKVISION SHALL NOT TAKE ANY RESPONSIBILITIES FOR ABNORMAL OPERATION, PRIVACY LEAKAGE OR OTHER DAMAGES RESULTING FROM CYBER-ATTACK, HACKER ATTACK, VIRUS INFECTION, OR OTHER INTERNET SECURITY RISKS; HOWEVER, HIKVISION WILL PROVIDE TIMELY TECHNICAL SUPPORT IF REQUIRED.
- YOU AGREE TO USE THIS PRODUCT IN COMPLIANCE WITH ALL APPLICABLE LAWS, AND YOU ARE SOLELY RESPONSIBLE FOR ENSURING THAT YOUR USE CONFORMS TO THE APPLICABLE LAW. ESPECIALLY, YOU ARE RESPONSIBLE, FOR USING THIS PRODUCT IN A MANNER THAT DOES NOT INFRINGE ON THE RIGHTS OF THIRD PARTIES, INCLUDING WITHOUT LIMITATION, RIGHTS OF PUBLICITY, INTELLECTUAL PROPERTY RIGHTS, OR DATA PROTECTION AND OTHER PRIVACY RIGHTS. YOU SHALL NOT USE THIS PRODUCT FOR ANY PROHIBITED END-USES, INCLUDING THE DEVELOPMENT OR PRODUCTION OF WEAPONS OF MASS DESTRUCTION, THE DEVELOPMENT OR PRODUCTION OF CHEMICAL OR BIOLOGICAL WEAPONS, ANY ACTIVITIES IN THE CONTEXT RELATED TO ANY NUCLEAR EXPLOSIVE OR UNSAFE NUCLEAR FUEL-CYCLE, OR IN SUPPORT OF HUMAN RIGHTS ABUSES.
- IN THE EVENT OF ANY CONFLICTS BETWEEN THIS DOCUMENT AND THE APPLICABLE LAW, THE LATTER PREVAILS.

© Hangzhou Hikvision Digital Technology Co., Ltd. All rights reserved.

Regulatory Information

These clauses apply only to the products bearing the corresponding mark or information.

EU Compliance Statement

This product and - if applicable - the supplied accessories too are marked with "CE" and comply therefore with the applicable harmonized European standards listed under the Directive 2014/30/EU (EMCD) and Directive 2011/65/EU (RoHS).

Note: The products with the input voltage of within 50 to 1000 VAC or 75 to 1500 VDC comply with Directive 2014/35/EU (LVD), and the rest products comply with Directive 2001/95/EC (GPSD). Please check the specific power supply information for reference.

The full text of the EU declaration of conformity is available at the following internet address:
https://www.hikvision.com/en/support/compliance/declaration-of-conformity.

Warning: This is a class A product. In a domestic environment this product may cause radio interference, in which case, the user may be required to take adequate measures.

Directive 2012/19/EU (WEEE Directive): Products marked with this symbol cannot be disposed of as unsorted municipal waste in the European Union. For proper recycling, return this product to your local supplier upon the purchase of equivalent new equipment, or dispose of it at designated collection points. For more information see: www.recyclethis.info.

According to the Waste Electrical and Electronic Equipment Regulations 2013: Products marked with this symbol cannot be disposed of as unsorted municipal waste in the United Kingdom. For proper recycling, return this product to your local supplier upon the purchase of equivalent new equipment, or dispose of it at designated collection points. For more information see: www.recyclethis.info.

Regulation (EU) 2023/1542(Battery Regulation): This product contains a battery and it is in conformity with the Regulation (EU) 2023/1542. The battery cannot be disposed of as unsorted municipal waste in the European Union. See the product documentation for specific battery information. The battery is marked with this symbol, which may include lettering to indicate cadmium (Cd), or lead (Pb). For proper recycling, return the battery to your supplier or to a designated collection point. For more information see: www.recyclethis.info.www.recyclethis.info.

According to the Batteries and Accumulators (Placing on the Market)

Regulations 2008 and the Waste Batteries and Accumulators Regulations 2009: This product contains a battery that cannot be disposed of as unsorted municipal waste in the United Kingdom. See the product documentation for specific battery information. The battery is marked with this symbol, which may include lettering to indicate cadmium (Cd), lead (Pb), or mercury (Hg). For proper recycling, return the battery to your supplier or to a designated collection point. For more information see: www.recyclethis.info.

Industry Canada ICES-003 Compliance

This device meets the CAN ICES-003 (A) / NMB-003 (A) standards requirements.
Cet appareil répond aux exigences des normes CAN ICES-003 (A)/NMB-003 (A).

KC

A 급 기기: 이 기기는 업무용(A 급) 전자파적합기기로써 판매자 또는 사용자는 이 점을 주의하시기바라며, 가정 외의 지역에서 사용하는 것을 목적으로 합니다.

Intended Use of the Explosion-proof Positioning System

ATEX: Ⓔx II 2G Ex db IIC T6 Gb / II 2D Ex tb IIIC T80℃ Db
IECEx: Ex db IIC T6 Gb /Ex tb IIIC T80℃ Db
Hazardous Area Classification: Combustible gas environment Zone 1, Zone 2. Combustible dust environment Zone 21, Zone 22.
IP Degree: IP66/IP68 (2m, 2h)
Ex Standards:

IEC 60079-0: 2017	EN IEC 60079-0: 2018
IEC 60079-1: 2014	EN 60079-1: 2014
IEC 60079-31: 2022	EN IEC 60079-31: 2024

Special Conditions for Safe Use

1. The flameproof joint cannot be repaired.
2. Use fasteners with yield stress ≥450MPa.
3. The fasteners can only be replaced with identical ones.
4. The equipment must not be used in areas affected by charge-producing processes, mechanical friction and separation processes, electron emissions (e.g in the vicinity of electrostatic coating equipment), and pneumatically conveyed dust to avoid electrostatic.
5. The entry shall be equipped with Ex certified cable glands with a compatible mode of protection for the intended use.
6. To reduce the risk of iginition due to electrostatic discharge, avoid contact with the lens while an explosive atmosphere is present. Clean only with a damp cloth.

Explanation of model naming

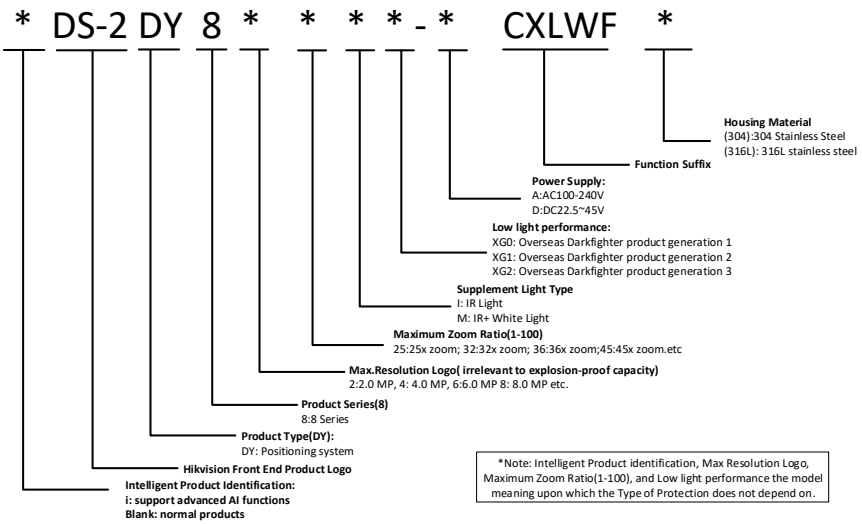

Mechanical Specification

- Material: SUS 304 or 316L

Working Environment

- Altitude (Above sea level): Within 2000 m.
- Humidity: Within 95%.

Torque Specification

- Airtight test hole (M10 × 1): 35 N·m
- Power chamber side cover (M120 × 1.5): 30 N·m
- Clamping nut (M25 × 1.5): 30 N·m
- Power chamber base cover (M144 × 1.5): 30 N·m

Power Supply

- AC: Voltage: 100 V to 240 V, Current: ≤1000 mA
- DC: Voltage: 22.5 V to 45 V, Current: ≤4800 mA

Bearing Part Note:

Working temperature range:

The bearing part should be regularly coated with lubricant, and the lubrication part should be cleaned before applying. The recommended lubricant for this product is MOLYKOTE® 33M Grease ®, and the use temperature is -73°C to +180°C.

Note:

- To ensure safety of the users and explosion-proof performance of the device, your installation environment must meet the installation requirements of the

device you purchased.

- Grounding: The both internal and external earthing shall be connected reliably.

Safety Instructions

Warnings

Laws and Regulations

The device should be used in compliance with local laws, electrical safety regulations, and fire prevention regulations.

Electrical Safety

CAUTION: To reduce the risk of fire, replace only with the same type and rating of fuse.

This equipment shall be installed incorporated with UPS to avoid the risk of restart.

The equipment must be connected to an earthed mains socket-outlet.

For permanently connected equipment the disconnect device shall be incorporated in the equipment, unless the equipment is accompanied by installation instructions stating that an appropriate disconnect device shall be provided as part of the building installation.

NOTE: External disconnect devices will not necessarily be supplied with the equipment.

A readily accessible disconnect device with the appropriate rating shall be incorporated external to the equipment.

An overcurrent protective device with the appropriate rating shall be incorporated external to the equipment not exceeding the specification of the building.

An all-pole mains switch shall be incorporated in the electrical installation of the building.

Battery

This equipment is not suitable for use in locations where children are likely to be present.

CAUTION: Risk of explosion if the battery is replaced by an incorrect type.

Improper replacement of the battery with an incorrect type may defeat a safeguard (for example, in the case of some lithium battery types).

Do not dispose of the battery into fire or a hot oven, or mechanically crush or cut the battery, which may result in an explosion.

Do not leave the battery in an extremely high temperature surrounding environment, which may result in an explosion or the leakage of flammable liquid or gas.

Do not subject the battery to extremely low air pressure, which may result in an explosion or the leakage of flammable liquid or gas.

Dispose of used batteries according to the instructions.

Maintenance

To avoid fire danger caused by electrostatic charge, never touch or wipe the device in explosive environment. Perform the wiping and replacing accessories only under non-explosive environment with the glove.

To prevent accumulation of electrostatic charge, use a soft and damp cloth when clean inside and outside surfaces of the bubble. DO NOT use alkaline detergents.

Installation

Never place the equipment in an unstable location. The equipment may fall, causing serious personal injury or death.

⚠ Cautions

External Bonding and Conductors

The wire for external earthing shall be cross-section area given phase wires, but not less than $4mm^2$.

Electrical Safety

Ensure correct wiring of the terminals for connection to an AC mains supply.

The equipment has been designed, when required, modified for connection to an IT power distribution system.

Fire Prevention

No naked flame sources, such as lighted candles, should be placed on the equipment.

The serial port of the equipment is used for debugging only.

Installation

Install the equipment according to the instructions in this manual.

Be sure that there is enough space to install the device and accessories.

Make sure that the wall is strong enough to withstand at least 8 times the weight of the camera and the mount.

Make sure that the power has been disconnected before you wire, install, or disassemble the device.

Installation could be only conducted by qualified personnel according to relevant national regulations.

Transportation

Keep the device in original or similar packaging while transporting it.

Do not drop the product or subject it to physical shock.

Power Supply

Refer to the device label for the standard power supply. Please make sure your power supply matches with your device.

System Security

Please understand that you have the responsibility to configure all the passwords and other security settings about the device, and keep your user name and password.

Maintenance

If the product does not work properly, please contact your dealer or the nearest service center. We shall not assume any responsibility for problems caused by unauthorized repair or maintenance.

To ensure explosion-proof performance, do not damage explosion-proof surface.

Ambient temperature: -40°C to 60°C

DO NOT OPEN WHEN ENERGIZED.

POTENTIAL ELECTROSTATIC CHARGING HAZARD – SEE INSTRUCTIONS.

When assembly and operation, the operator must follow the requirements of the IEC 60079-14: latest version Explosive atmospheres- Part 14: Electrical installations design, selection and erection, beside of the manufacturer's operating instructions or its National equivalent.

Repair and overhaul shall comply with IEC 60079-19: latest version or its National equivalent.

Cleaning

Please use a soft and damp cloth to clean the interior and exterior surfaces. Do not use alkaline detergents.

Using Environment

When any laser equipment is in use, make sure that the device lens is not exposed to the laser beam, or it may burn out.

Do not aim the lens at the sun or any other bright light.

To avoid heat accumulation, good ventilation is required for a proper operating environment.

DO NOT expose the device to extremely hot, cold, dusty, corrosive, saline-alkali, or damp environments. For temperature and humidity requirements, see device specification.

DO NOT expose the device to high electromagnetic radiation.

Illuminator

Make sure that there is no reflective surface too close to the camera lens. The IR light from the camera may reflect back into the lens causing reflection.

The beam of the light at the distance of 200 mm is classified as Risk Group 1 (RG1). Possible hazardous optical radiation emitted from this product. Do NOT stare at operating light source. May be harmful to the eyes.

If appropriate shielding or eye protection is not available, turn on the light only at a safe distance or in the area that is not directly exposed to the light when installing or maintaining the device.

Emergency

If smoke, odor, or noise arises from the device, immediately turn off the power, unplug the power cable, and contact the service center.

Time Synchronization

Set up device time manually for the first time access if the local time is not

synchronized with that of the network. Visit the device via Web browse/client software and go to time settings interface.

See Far, Go Further