DS-2XE6A86G0-D(A)LIZHRS(316L)
316L 8MP 40x Explosion-proof Vari-focal Bullet

- Explosion-proof design: the camera has passed international ATEX & IECEx certifications, and can be used in gas and dust hazardous scenarios
- IP68 water resistant, preventing water ingress for outdoor use
- H.265+/H.265/H.264+/H.264 encoding: efficient compression technology saves storage space and reduces bandwidth requirements

▪ Specification

Camera	
Image Sensor	1/1.8" Progressive Scan CMOS
Max. Resolution	3840 × 2160
Min. Illumination	Color: 0.0005 Lux @ (F1.2, AGC ON),0 Lux with light,B/W: 0.0001 Lux @ (F1.2, AGC ON)
Shutter Time	1/3 s to 1/100,000 s
Day & Night	IR cut filter
Lens	
Focal Length & FOV	6.9 to 276 mm: horizontal FOV 61.0° to 1.9°, vertical FOV 35.3° to 1.0°, diagonal FOV 69.2° t o 2.1°
DORI	
DORI	Wide: D: 138.0 m, O: 54.8m, R: 27.6 m, I: 13.8 m Tele: D: 4300.0 m, O: 1706.3 m, R: 860.0 m, I: 430.0 m
Illuminator	
Supplement Light Type	IR,White Light
Supplement Light Range	IR: up to 150 m White Light: up to 50 m
IR Wavelength	850 nm
AI Open Platform	
Model Specification	Supports 4 model packages, and each model package supports detecting 16 target types and classfing 4 targets. The targets can be classified as 64 types. The device runs only 1 model at the same time. Built-in PPE_Detection
Video	
Main Stream	50 Hz：25 fps（3840 × 2160，3072 ×1728，2560 ×1440，1920 × 1080，1280 × 960，1280 × 720） 60 Hz：30 fps（3840 × 2160，3072 ×1728，2560 ×1440，1920 × 1080，1280 × 960，1280 × 720）
Sub-Stream	50 Hz：25 fps（704 × 576，640 × 480，352 × 288） 60 Hz：30 fps（704 × 480，640 × 480，352 × 240）
Third Stream	50 Hz：25 fps（1920 × 1080，1280 ×960，1280 ×720，704 × 576，640 × 480，352 × 288） 60 Hz：30 fps（1920 × 1080，1280 ×960，1280 × 720，704 × 480，640 × 480，352 × 240）
Video Compression	Main stream: H.265/H.264/H.264+/H.265+, Sub-stream: H.265/H.264/MJPEG, Third stream: H.265/H.264/MJPEG
Video Bit Rate	32 Kbps to 16 Mbps
H.264 Type	Baseline Profile,Main Profile,High Profile
H.265 Type	Main Profile
Bit Rate Control	CBR,VBR

Scalable Video Coding (SVC)	H.264 and H.265 encoding
Region of Interest (ROI)	8 fixed regions for each stream
Target Cropping	No
Audio	
Audio Type	Mono sound
Audio Compression	G.711ulaw/G.711alaw/G.722.1/G.726/MP2L2/PCM/AAC_LC/MP3
Audio Bit Rate	64 Kbps (G.711ulaw/G.711alaw)/16 Kbps (G.722.1)/16 Kbps (G.726)/32 to 160 Kbps (MP2L2)/8 to 320 Kbps (MP3)/16 to 64 Kbps (AAC-LC)
Audio Sampling Rate	8 kHz/16 kHz/32 kHz/48 kHz
Environment Noise Filtering	Yes
Network	
Protocols	TCP/IP, ICMP, HTTP, HTTPS, FTP, DHCP, DNS, DDNS, RTP, RTSP, NTP, UPnP, SMTP, IGMP, 802.1X, QoS, IPv4, IPv6, UDP, Bonjour, SSL/TLS, PPPoE, SFTP, ARP, SNMP, WebSocket, WebSockets, RTCP
Simultaneous Live View	Up to 20 channels
API	Open Network Video Interface (Profile S, Profile G, Profile T), ISAPI, SDK, ISUP
User/Host	Up to 32 users. 3 user levels: administrator, operator and user
Security	Password protection, complicated password, HTTPS encryption, 802.1X authentication (EAP-MD5), watermark, IP address filter, basic and digest authentication for HTTP/HTTPS, WSSE and digest authentication for Open Network Video Interface, TLS1.2, TPM 2.0(FIPS 140-2 level 2)
Network Storage	NAS (NFS, SMB/CIFS),Auto Network Replenishment (ANR)
Client	iVMS-4200, Hik-Connect, Hik-Central
Web Browser	Plug-in required live view: IE 10, IE 11 Plug-in free live view: Chrome 57.0+, Firefox 52.0+, Edge 89+, Safari 11+ Local service: Chrome 57.0+, Firefox 52.0+, Edge 89+
Image	
Image Parameters Switch	Yes
Image Settings	saturation,brightness,contrast,sharpness,gain,white balance,AGC,adjustable by client software or web browser
Day/Night Switch	Day,Night,Auto,Schedule
Wide Dynamic Range (WDR)	120 dB
SNR	≥ 52 dB
Image Enhancement	BLC,HLC,3D DNR
Interface	
Ethernet Interface	1 RJ45 10 M/100 M self-adaptive Ethernet port
On-Board Storage	Built-in memory card slot, support microSD/microSDHC/microSDXC card, up to 512 GB, *You are recommended to purchase memory card together with the product if needed. After ordering, the memory card will be installed to product during manufacturing.
Built-in Microphone	Yes, 2 built-in microphones
Audio	1 input (line in), two-core terminal block, max. input amplitude: 3.3 Vpp, input impedance: 4.7 KΩ, interface type: non-equilibrium, 1 output (line out), two-core terminal block, max. output amplitude: 3.3 Vpp, output impedance: 100 Ω, interface type: non-equilibrium
Alarm	1 input, 1 output (max. 24 VDC, 1 A)

RS-485	1 RS-485 (Half duplex, HIKVISION, Pelco-P, Pelco-D, self-adaptive)
Fiber Optical	FC interface, built-in fiber module (155M, TX1310/RX1550nm wavelength, single module fiber, up to 20 km transmission distance)
Event	
Basic Event	Motion detection (support alarm triggering by specified target types (human and vehicle)),video tampering alarm,exception (network disconnected, IP address conflict, illegal login, HDD full, HDD error, abnormal restart)
Smart Event	Unattended baggage detection, object removal detection,audio exception detection,Line crossing detection, intrusion detection, region entrance detection, region exiting detection
Linkage	Upload to FTP/NAS/memory card,notify surveillance center,send email,trigger alarm output,trigger recording,trigger capture,audible warning
Deep Learning Function	
Perimeter Protection	Line crossing, intrusion, region entrance, region exiting Support alarm triggering by specified target types (human and vehicle)
Face Capture	Detects up to 40 faces simultaneously, Supports swing left and right from -70° to +70°, tilt up and down from -50° to +50°, Uploads face with background and closed-up face pictures
People Counting	Yes
Queue Management	Supports up to 8 detection regions, and independent arming schedule and linkage method Supports 2 detection modes: regional people queuing-up, waiting time detection Generates reports to compare the efficiency of different queuing-ups and display the changing status of one queue Supports raw data export for further analysis Supports real-time data uploading and scheduled data uploading Regional people queuing-up: supports 4 alarm trigger conditions, including greater than threshold, less than threshold, equal to threshold, not equal to threshold Waiting time detection: supports 1 alarm trigger condition, including greater than threshold
Heat Map	A graphic description of visits (by calculating amount of people or amount of dwell time) in a configured area., Two report types are available, space heat map and time heat map line chart.
Road Traffic and Vehicle Detection	Blocklist and allowlist: up to 10,000 records Captures vehicle that has no license plate Support license plate recognition of motorcycles (only in checkpoint scenario) Support vehicle attribute detection, including vehicle type, color, brand, etc. (City Street mode is recommended.)

Regional People Counting	Supports up to 8 detection regions, and independent arming schedule and linkage method Supports 3 detection modes: people density detection, number of people exception detection, waiting time exception detection Supports parameter settings: alarm times per exception, alarm interval, first alarm delay Supports searching real-time number of people People density detection: supports scheduled uploading, number of people change uploading, congestion level uploading Number of people exception detection: supports 6 alarm trigger conditions, including greater than threshold A, less than threshold A, equal to threshold A, not equal to threshold A, greater than threshold A and less than threshold B, less than threshold A or greater than threshold B (threshold A should be less than threshold B) Waiting time exception detection: supports 3 alarm trigger conditions, including greater than threshold A, less than threshold A, greater than threshold A and less than threshold B (threshold A should be less than threshold B)
On/Off Duty Detection	Supports up to 8 detection regions, and independent arming schedule and linkage method Supports 2 detection modes: absence detection, on/off duty detection Supports parameter settings: person on duty, absence duration
General	
Power	-A: 100 V to 240 V, 0.4 A to 0.2 A, max. 22 W; PoE (IEEE 802.3at class 4), max. 22 W -D: 9 V to 36 V, 2.2 A to 0.6 A, max. 22 W; PoE (IEEE 802.3at class 4), max. 22 W
Material	SUS316L with anti-corrosion coating
Dimension	330.4 mm × 208.3 mm × 201.7 mm (13" × 8.2" × 7.9")
Package Dimension	522 mm × 312 mm × 302 mm (20.55" × 12.28" × 11.89")
Weight	Approx. 8 kg (17.63 lb.)
With Package Weight	Approx. 9.4 kg (20.72 lb.)
Startup and Operating Conditions	-40 °C to 60 °C (-40 °F to 140 °F). Humidity 95% or less (non-condensing)
Language	33 languages: English, Russian, Estonian, Bulgarian, Hungarian, Greek, German, Italian, Czech, Slovak, French, Polish, Dutch, Portuguese, Spanish, Romanian, Danish, Swedish, Norwegian, Finnish, Croatian, Slovenian, Serbian, Turkish, Korean, Traditional Chinese, Thai, Vietnamese, Japanese, Latvian, Lithuanian, Portuguese (Brazil), Ukrainian
Cable Length	Armored Cable:1.3 or 5 or 10 m (4.26 ft. or 16.40 or 32.81 ft.)
Approval	
EMC	CE-EMC: EN 55032:2015+A1:2020, EN 50130-4:2011+A1:2014, EN IEC 61000-3-2:2019+A1:2021, EN 61000-3-3:2013+A1:2019+A2:2021, RCM: AS/NZS CISPR 32: 2015, IC: ICES-003: Issue 7, KC: KN32: 2015, KN35: 2015
Safety	CB: IEC 62368-1: 2014+A11, CE-LVD: EN 62368-1: 2014/A11: 2017, BIS: IS 13252 (Part 1): 2010/IEC 60950-1: 2005, LOA: IEC/EN 60950-1
Protection	IK10: IEC 62262:2002,IP66: IEC 60529-2013,IP68: IEC 60529-2013,IP69: IEC 60529-2013

Explosion-Proof Protection	ATEX: Ex II 2 G D Ex db ib IIC T6 Gb/Ex ib tb IIIC T80 °C Db IP68 IECEx: Ex db ib IIC T6 Gb/Ex ib tb IIIC T80 °C Db IP68 For explosive gas atmospheres, the maximum surface temperature is 85 °C; For flammable dust atmospheres, the maximum surface temperature is 80 °C; IIC: for explosive gas atmospheres other than mines susceptible to firedamp; For explosive gas mixture atmospheres: Zone 1, Zone 2, Zone 21, Zone 22.

▪ Typical Application

Hikvision products are classified into three levels according to their anti-corrosion performance. Refer to the following description to choose for your using environment.

This model has top-level protection.

Level	Description
Top-level protection	Hikvision products at this level are equipped for use in areas where professional anti-corrosion protection is a must. Typical application scenarios include coastlines, docks, chemical plants, and more.
Moderate protection	Hikvision products at this level are equipped for use in areas with moderate anti-corrosion demands. Typical application scenarios include coastal areas about 2 kilometers (1.24 miles) away from coastlines, as well as areas affected by acid rain.
No specific protection	Hikvision products at this level are equipped for use in areas where no specific anti-corrosion protection is needed.

▪ Dimension

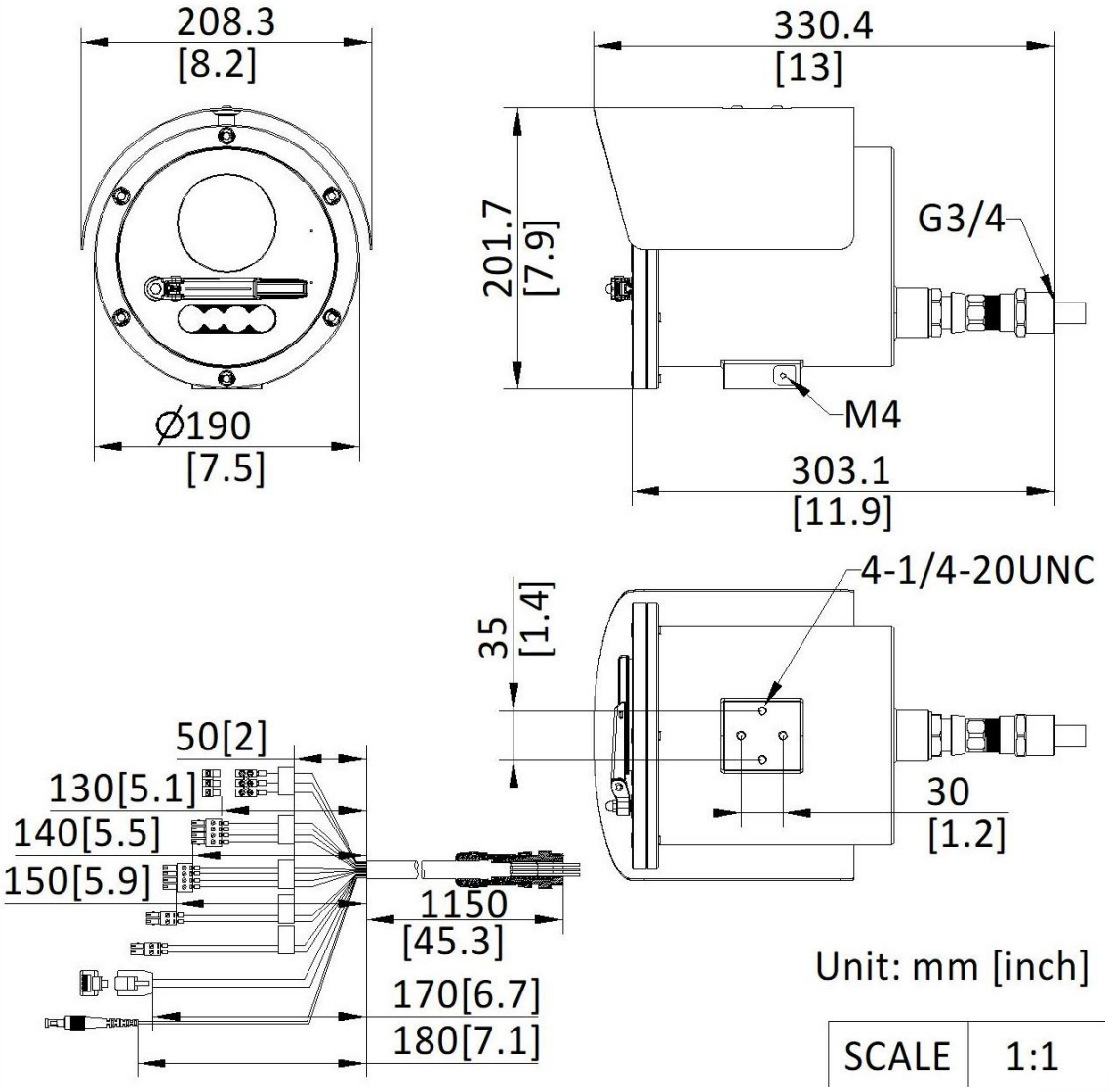
208.3
[8.2]
Ø190
[7.5]
330.4
[13]
201.7
[7.9]
G3/4
M4
303.1
[11.9]
4-1/4-20UNC
35
[1.4]
30
[1.2]
50[2]
130[5.1]
140[5.5]
150[5.9]
1150
[45.3]
170[6.7]
180[7.1]
Unit: mm [inch]
SCALE
1:1

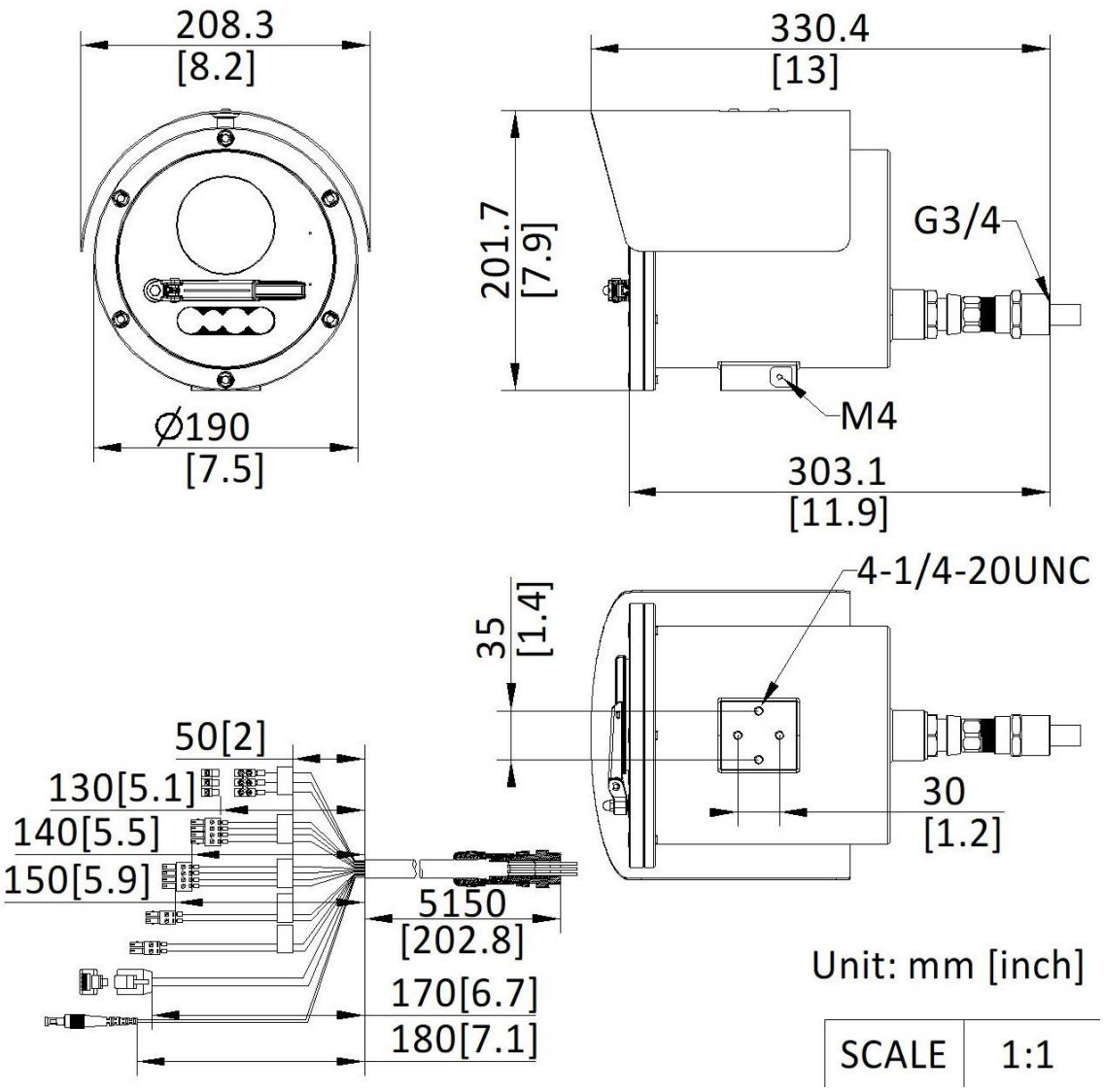
208.3
[8.2]
Ø190
[7.5]
330.4
[13]
201.7
[7.9]
G3/4
M4
303.1
[11.9]
4-1/4-20UNC
35
[1.4]
30
[1.2]
50[2]
130[5.1]
140[5.5]
150[5.9]
5150
[202.8]
170[6.7]
180[7.1]
Unit: mm [inch]
SCALE
1:1

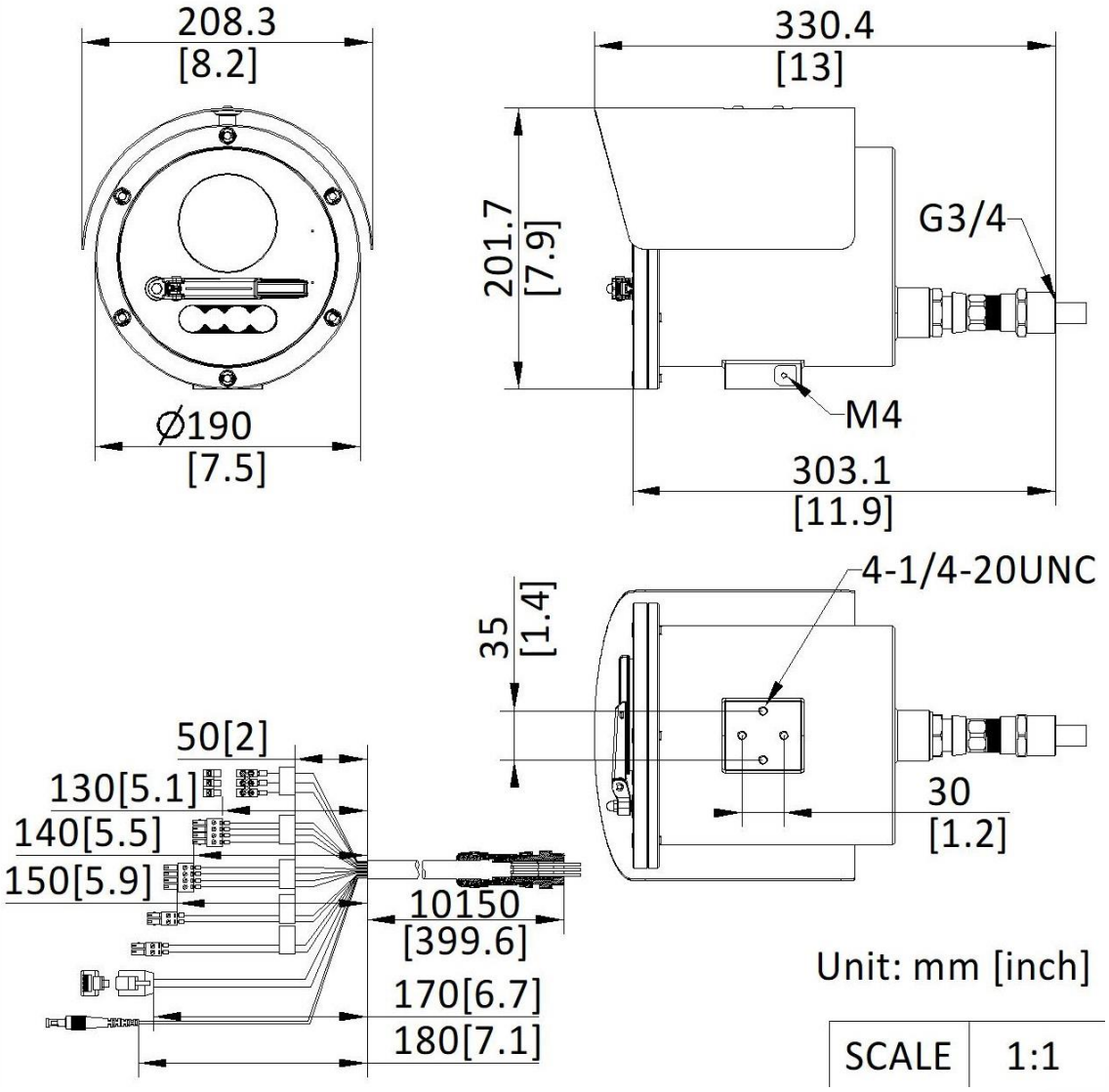

▪ Accessory

▪ Optional

DS-2XE2705-M04(316L)	DS-1712ZJ	DS-4401ZJ-GY38SL YHinge	DS-1751ZJ-AC(OS)	DS-2XE2707CB-M12(316L)
				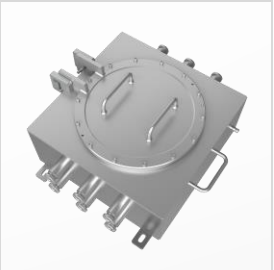
DS-2XE2705CB-M04(316L)				

- **Installation Methods**

Junction Box DS-2XE2705CB-M04(316L)

See Far, Go Further

www.hikvision.com
support@hikvision.com

© Hangzhou Hikvision Digital Technology Co., Ltd. Unless otherwise agreed, Hikvision makes no warranties, express or implied. We reserve the right to introduce modifications without notice.