DS-7616NXI-K2/16P(E)(STD)/UAE
16-ch PoE 1U K Series AcuSense 4K NVR



- Adopt Hikvision Acusense technology to minimize manual effort and security costs
- Efficient playback with AcuSearch technology
- Accurate perimeter protection effectively reduces false alarms
- Automatic cameras connection and configuration
- Up to 16-ch IP camera inputs, plug & play with 16 Power-over-Ethernet (PoE) interfaces
- H.265+/H.265/H.264+/H.264 video formats
- Up to 3-ch@12 MP or 5-ch@8 MP or 10-ch@4 MP or 16-ch@2 MP decoding capacity
- Up to 160 Mbps incoming bandwidth

▪ Specification

Model		DS-7616NXI-K2/16P(E)(STD)/UAE
Intelligent Analytics	AI by NVR	Facial recognition, perimeter protection, motion detection 2.0, AcuSearch
	AI by Camera	Facial recognition, perimeter protection, motion detection2.0, ANPR
AcuSearch	By Camera	All channels *: The camera should enable AcuSearch function
Perimeter Protection	By NVR	Video analysis (HD network camera, H.264/H.265) for human and vehicle recognition to reduce false alarm. Up to 4 MP : 2-ch; 5 MP to 8 MP : 1-ch
	By Camera	All channels
Target Recognition	Facial Detection and Analytics	Face picture comparison, human face capture, face picture search
	Facial Detection and Analytics Performance	Up to 4 MP: 2-ch; 8 MP to 5 MP: 1-ch
	Face Picture Comparison	8-ch
	Face Picture Library	Up to 16 face picture libraries, with up to 50,000 face pictures in total (each picture ≤ 1 MB, total capacity ≤ 1 GB)
Motion Detection 2.0	By NVR	All channels, up to 4 MP (when enhanced SVC mode is enabled, up to 8 MP) video analysis for human and vehicle recognition to reduce false alarm
	By Camera	All channels
Video and Audio	IP Video Input	16-ch
	IP Speaker Input	4-ch
	Incoming Bandwidth	160 Mbps
	Outgoing Bandwidth	160 Mbps
	Video Output Mode	HDMI/VGA independent output
	HDMI Output	1-ch, 4K (3840 × 2160)/30Hz, 2K (2560 × 1440)/60Hz, 1920 × 1080/60Hz, 1600 × 1200/60Hz, 1280 × 1024/60Hz, 1280 × 720/60Hz, 1024 × 768/60Hz
	VGA Output	1-ch, 1920 × 1080/60Hz, 1600 × 1200/60Hz, 1280 × 1024/60Hz, 1280 × 720/60Hz
	Audio Output	1-ch, RCA (Linear, 1 KΩ)
	Two-Way Audio	1-ch, RCA (2.0 Vp-p, 1 KΩ, using the audio input)
Decoding	Decoding Format	H.265/H.265+/H.264/H.264+
	Recording Resolution	16 MP/12 MP/8 MP/6 MP/5 MP/4 MP/3 MP/1080P/UXGA/720P/VGA/4CIF/DCIF/2CIF/CIF/QCIF *: 16 MP is only available for channel 1.

	Synchronous playback	16-ch
	Decoding Capability	AI on: 2-channel 12 MP@30 fps, 4-channel 8 MP@30 fps, 5-channel 6 MP@30 fps, 8-channel 4 MP@30 fps, 10-channel 3 MP@30fps, 16-channel 2 MP@30fps AI off: 3-channel 12 MP@30 fps, 5-channel 8 MP@30 fps, 6-channel 6 MP@30 fps, 10-channel 4 MP@30 fps, 13-channel 3 MP@30fps, 16-channel 2 MP@30fps
	Stream Type	Video, Video and Audio
	Audio Compression	G.711ulaw/G.711alaw/G.722/G.726/AAC/MP2L2
Network	Remote Connection	128
	API	ONVIF (profile S/G); SDK; ISAPI
	Compatible Browser	IE 11, Chrome 91, Firefox 88, Safari 12, Edge 91,or above version
	Network Protocol	TCP/IP, DHCP, IPv4, IPv6, DNS, DDNS, NTP, RTSP, SADP, SMTP, SNMP, iSCSI, ISUP, UPnP™, HTTP, HTTPS
	Network Interface	1, RJ-45 10/100/1000 Mbps self-adaptive Ethernet interface
PoE	Interface	16, RJ-45 10/100 Mbps self-adaptive Ethernet interface
	Power	≤ 200W
	Standard	IEEE 802.3af/at
Auxiliary Interface	SATA	2 SATA interfaces
	Capacity	Up to 16 TB capacity for each HDD
	Alarm In/Out	4/1
	USB Interface	Front panel: 1 × USB 2.0; Rear panel: 1 × USB 2.0
General	GUI Language	English, Russian, Bulgarian, Hungarian, Greek, German, Italian, Czech, Slovak, French, Polish, Dutch, Portuguese, Spanish, Romanian, Turkish, Japanese, Danish, Swedish, Norwegian, Finnish, Korean, Traditional Chinese, Thai, Estonian, Vietnamese, Croatian, Slovenian, Serbian, Latvian, Lithuanian, Uzbek, Kazakh, Arabic, Hebrew, Ukrainian, Indonesian
	Fan	Supports
	Power Supply	100 to 240 VAC, 50 to 60 Hz
	Consumption	≤ 15 W (without HDD)
	Working Temperature	-10 °C to 55 °C (14 °F to 131 °F)
	Working Humidity	10% to 90%
	Dimension (W × D × H)	384 mm × 317 mm × 52 mm (15.12 × 12.48 × 2.03 inch)
	Weight	≤ 3kg (without HDD, 6 lb.)
Certification	CE	EN 55032: 2015, EN 61000-3-2, EN 61000-3-3, EN 50130-4, EN 55035: 2017, EN 50130-4: 2014
	Obtained Certification	CE,CB,REACH,WEEE,UKCA,RCM,IC

▪Function

▪ Physical Interface

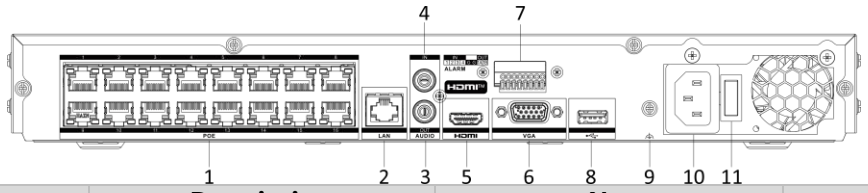

No.	Description	No.	Description
1	Network interfaces with PoE function	7	Alarm in/alarm out
2	LAN network interface	8	USB interface
3	AUDIO OUT	9	GND
4	AUDIO IN	10	AC100V~240V power supply
5	HDMI interface	11	Power switch
6	VGA interface		

▪ Available Model

DS-7616NXI-K2/16P(E)(STD)/UAE

▪ Dimension

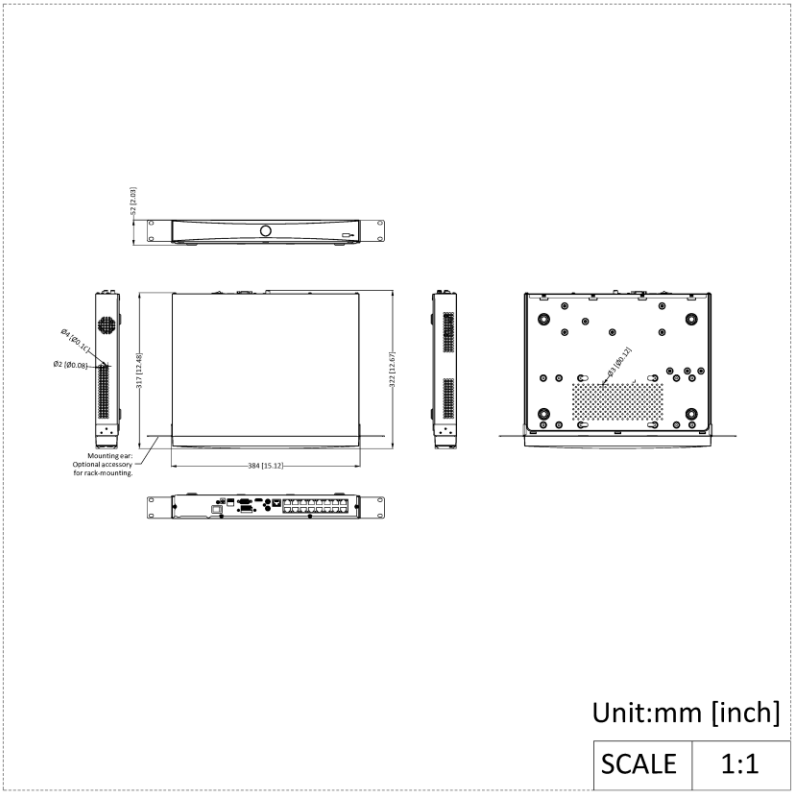

See Far, Go Further

www.hikvision.com
support@hikvision.com

© Hangzhou Hikvision Digital Technology Co., Ltd. Unless otherwise agreed, Hikvision makes no warranties, express or implied. We reserve the right to introduce modifications without notice.

HIKVISION®