DS-D5C65RB/B2L
65-inch 4K Interactive Display



The Hikvision WonderHub Interactive Flat Panel is an advanced all-in-one interactive display designed for modern collaboration and smart learning environments. Featuring a stunning 4K UHD touchscreen, intuitive interactive controls, and seamless wireless screen sharing, it delivers an engaging and efficient user experience. Powered by the WonderOS operating system and enhanced by the WonderHub Class cloud platform together with WonderHub AI intelligent capabilities, it provides powerful tools for teaching, presentations, and teamwork. The solution is ideally suited for classrooms, training centers, meeting rooms, and a wide range of collaborative spaces.

- UHD 4K display with a resolution of 3840 × 2160 and 540 nits brightness.
- Anti-Glare and Anti-Fingerprint design to ensure smooth interaction.
- Dual systems of Android and Windows (optional with 195×30×180mm OPS) saving cost and easy to use, video conferencing software is recommended to run on the Windows system.
- Supports up to 50-point multi-touch interaction with smooth and responsive writing.
- Built-in network switch chip eliminates the need for an external network switch.
- Multi-button front design for convenient classroom use.
- Durable all-in-one design with tempered safety glass and intelligent thermal management.
- Built-in Android 14 operating system with EDLA certification.
- Dual full-function USB Type-C ports, supporting up to 100W total power delivery and DisplayPort 1.2 input.
- Built-in sensors for ambient light, humidity, and temperature monitoring.

▪ Specification

Product Model	
Product Model	DS-D5C65RB/B2L
Display	
Screen Size	65 inch
Backlight	DLED
Pixel Pitch	0.124 (H) × 0.372 (V) mm
Resolution	3840 × 2160 @60 Hz
Brightness	540 cd/m² (Typ.)
Color Depth	10 bit (8 bit + FRC)
Display Color	1.07 G
Response Time	5 ms
Panel Type	VA
Contrast Ratio	5000:1 (Static) 30,000:1 (Dynamic)
Color Gamut	72% NTSC (CIE1931) (Typ.)
Refresh Rate	60 Hz
Viewing Angle	178° (H)/178° (V)
Aspect Ratio	16:9
Surface Hardness	9H (Pencil) 7 (Mohs)
Surface Glass	Anti-Glare & Anti-Fingerprint glass
Surface Haze	25% Haze
Glass Bonding Method	Zero Lamination
Display Area	1428.48 (H) × 803.52 (V)
Working Duration	7 × 16 H
Transmittance	88% ± 3
Lifespan	50,000 hours
Touch	
Type	Infrared Touch Screen
Touch Point	Up to 50-point multi-touch
Touch Response Time	≤ 2 ms
Minimum Touch Object	≥ 1.5 mm (≥ 90% touching area)
Touch Precision	± 0.5 mm (≥ 90% touching area)
Touch Resolution	32768 × 32768
Built-in System	
Operation System	Android 14.0
Memory	8 GB (Optional 16 GB) + Max 16 GB Virtual RAM
Built-in Storage	128 GB (Optional 256 GB)
Processor	Quad-core Cortex-A76 × 4 (2.4 GHz) and quad-core Cortex-A55 × 4 (1.8 GHz)
GPU	Mali-G610 MC4
NPU	6TOPs
HDCP Version	2.3 & 2.0 & 1.4
Camera	
Pixel	48 MP for Photos & 8 MP for Video

Camera Function	Intelligent switching between Android, OPS, and external PC systems.
Field Angle	93.4° (diagonal), 84.5° (horizontal), 54.1° (vertical)
Distortion	≤ 2.5%
Camera Resolution Ratio	Up to 4K
Microphone	
Specification	Omni-directional 8-array layout
Mic Function	Echo reduction and smart noise-cancellation
Voice Distance	12 m
Sampling Rate	32 K
Mic Depth	16 bit
Internal Function	
Loudspeaker	Built-in 2 × 20 W + 25 W loudspeaker;
Bluetooth	Built-in BLE (Bluetooth Low Energy) module supports Bluetooth 5.4
NFC	Support card reader 13.56 MHz, (ISO 14443A/ ISO 14443B/ ISO 15693)
Light Sensor	Yes
Humidity and Temperature Sensor	Relative humidity accuracy: up to ± 1.5 %RH; Temperature accuracy: up to ± 0.1 °C
Image Processing Technology	Supports 3D digital noise reduction, face detection, automatic white balance, automatic purple fringing correction, automatic defogging, and shadow correction.
Audio Processing Technology	Support dereverberation, adaptive noise reduction, adaptive non-stationary noise reduction, adaptive echo cancellation, automatic gain control, automatic electrical level control, sound source localization, speech dynamic detection, digital beam forming, speech detection.
AI Function	AI Assistant, AI Identify, and AI Notes. Free for a 1-year validity period with 6,000 minutes for AI Notes.
Whiteboard	Built-in whiteboard supports handwriting recognition, graphics recognition, document insertion, and more.
ScreenCast	Built-in WonderCast software supports screen casting for up to 9 devices simultaneously.
Language Supported	Simplified Chinese, German, Italian, Arabic, Portuguese, Dutch, French, Indonesian, Thai, Vietnamese, Japanese, Spanish, English, Czech, Danish, Hungarian, Polish, Turkish, Russian, Romanian, Slovak, Korean, Uzbek, Bulgarian, Greek, Swedish, Norwegian, Finnish, Croatian, Slovenian, Serbian, Hebrew, Ukrainian, Traditional Chinese (HK), Traditional Chinese (TW), Hindi, Latvian, Kazakh, Nepali
Interface	
Video & Audio Input	HDMI 2.1 TMDS × 3 (Front x 1; Rear x 2; Support HDCP2.3 & 2.0 & 1.4; Support HDMI CEC protocol) VGA × 1 (Rear) Audio × 1 (Rear)
Video & audio output	HDMI 2.1 TMDS × 1 (Rear) Audio × 1 (Rear) SPDIF × 1 (Rear)

Control interface	TOUCH-USB 3.0 × 1 (Front × 1) TOUCH-USB 2.0 × 2 (Rear × 2) RS232 × 1 (Rear)
Network Interface	LAN (1000 Mbps) × 2 (Rear) Wi-Fi AP & Station, 2.4 G/5 G Wi-Fi 6, IEEE 802.11 a/b/g/n/ac/ax 2 × 2 MIMO (2.4 GHz and 5 GHz) authentication protocols WEP, WPA, WPA2, PSK and 802.1X EAP
Data Transmission Interface	USB 3.0 × 4 (Front × 2; Rear × 2) USB 2.0 × 1 (Rear) Type-C × 2 (Front × 1; Rear × 1; Support USB 2.0, 100 W charging functions, DP IN 1.2)
Power	
Power Supply	100 to 240 VAC, 50/60 Hz
Standby Consumption	≤ 0.5 W
Average Consumption	< 184 W
Working Environment	
Working Temperature	0 °C to 40 °C (32 °F to 104 °F)
Working Humidity	10%~90% RH
General	
VESA	600 mm × 400 mm (4 × M8-25 mm)
Accessory	Wall mount bracket, hook, user manual, touch writing pen, packing list, 3 M touch USB cable, 3.5 M HDMI cable (2.0), 3 M power cable, remote control, screen cleaning cloth.
Package Dimensions (W × H × D)	1662 × 1062 × 223 mm
Net Weight	34.7 ± 0.5 kg
Gross Weight	47.1 ± 0.5 kg
Product Dimensions （With Wall Attachment）	1491.9 × 910.6 × 111.0 mm
Product Dimensions （Without Wall Attachment）	1491.9 × 910.6 × 82.3 mm

▪ Physical Interface

Interface	Description	Interface	Description
1.SPDIF	SPDIF interface	2.Line OUT	Audio output interface
3.Line IN	Audio input interface	4.VGA IN	Video devices connection interface
5.TYPE-C	Type-C interface with DP input	6.TOUCH-USB 2	Peripheral touch interface
7.HDMI IN 2	HDMI 2 input interface	8.TOUCH-USB	Peripheral touch interface
9.HDMI IN 1	HDMI 1 input interface	10.USB	USB 2.0 interface
11.MULTI-USB 2	Multi-functional USB 3.0 interface	12.MULTI-USB 1	Multi-functional USB 3.0 interface
13.HDMI OUT	HDMI output interface	14.RS 232	RS 232 Control interface
15.LAN 1	LAN 1 interface	16. LAN 2	LAN 2 interface
A.USB	USB 3.0 interface	B.USB	USB 3.0 interface

C.TOUCH-USB	Peripheral touch interface	D.HDMI IN	HDMI input interface
E.TYPE-C	Type-C interface with DP input	F.	Light sensor
G.	Remote-control unit	H.	Power Key
J.	Volume -	K.	Volume +
L.	Android host menu	M.	Return
N.	Control menu	P.	PC shutdown
R.	NFC sensing area	S.	Humidity&Temperature Sensor

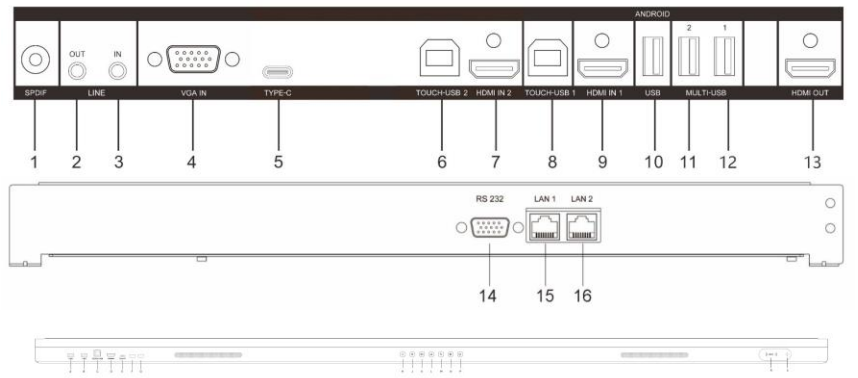

▪ Installation

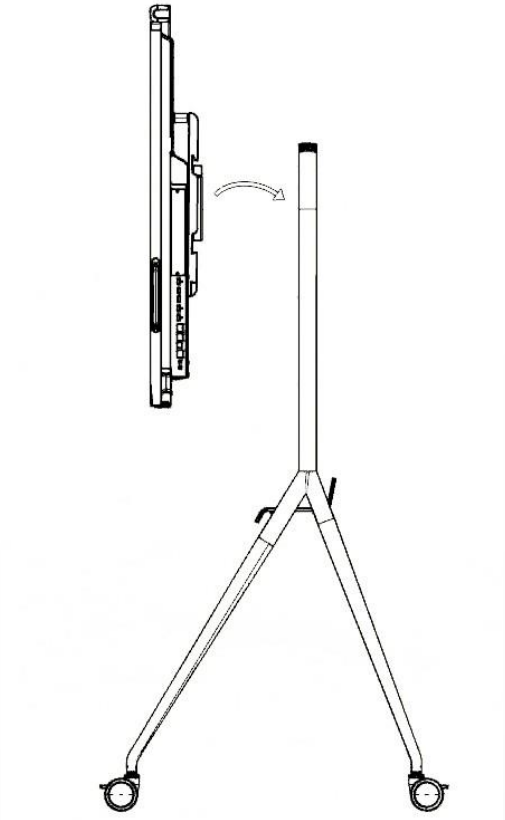

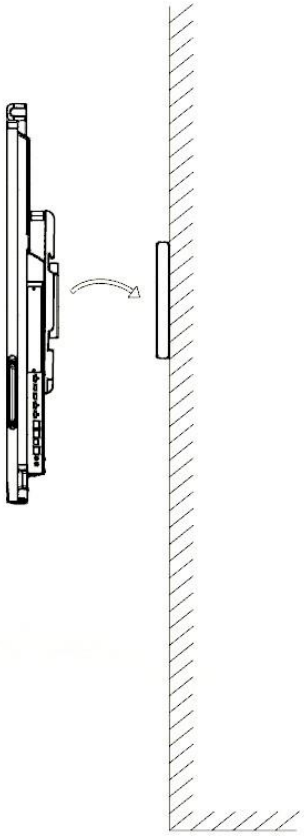

▪ Dimension

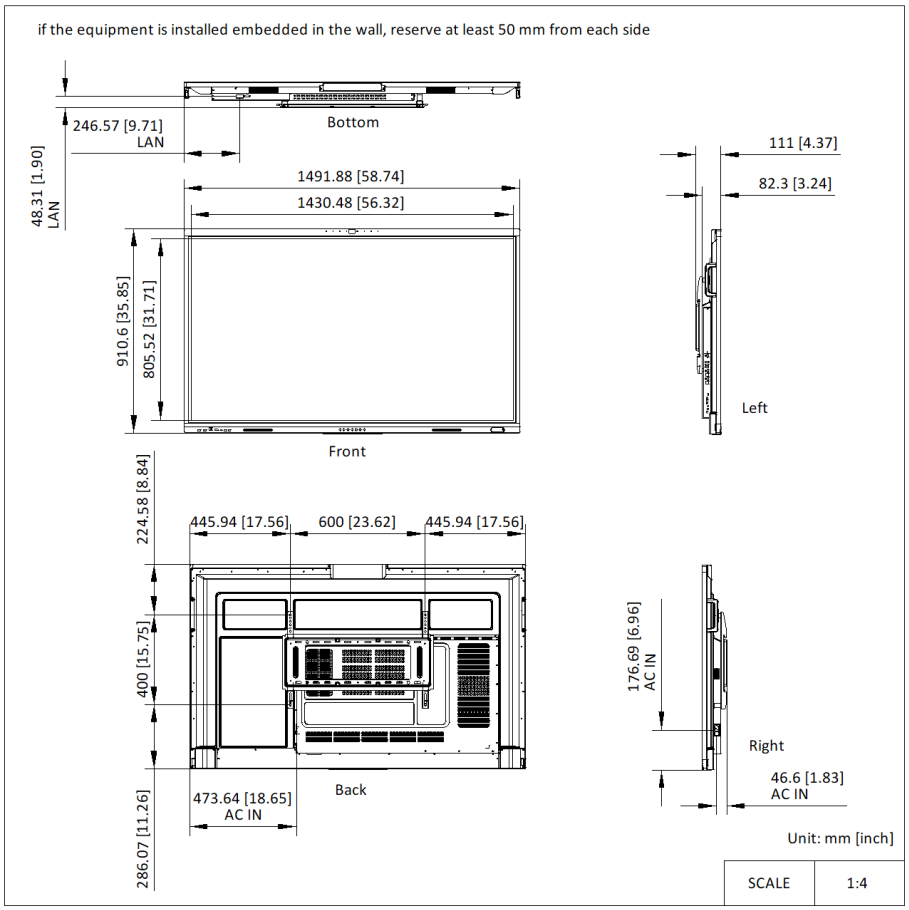
if the equipment is installed embedded in the wall, reserve at least 50 mm from each side
246.57 [9.71]
LAN
Bottom
48.31 [1.90]
LAN
1491.88 [58.74]
1430.48 [56.32]
910.6 [35.85]
805.52 [31.71]
Front
111 [4.37]
82.3 [3.24]
Left
224.58 [8.84]
445.94 [17.56]
600 [23.62]
445.94 [17.56]
400 [15.75]
473.64 [18.65]
AC IN
Back
286.07 [11.26]
176.69 [6.96]
AC IN
Right
46.6 [1.83]
AC IN
Unit: mm [inch]
SCALE
1:4

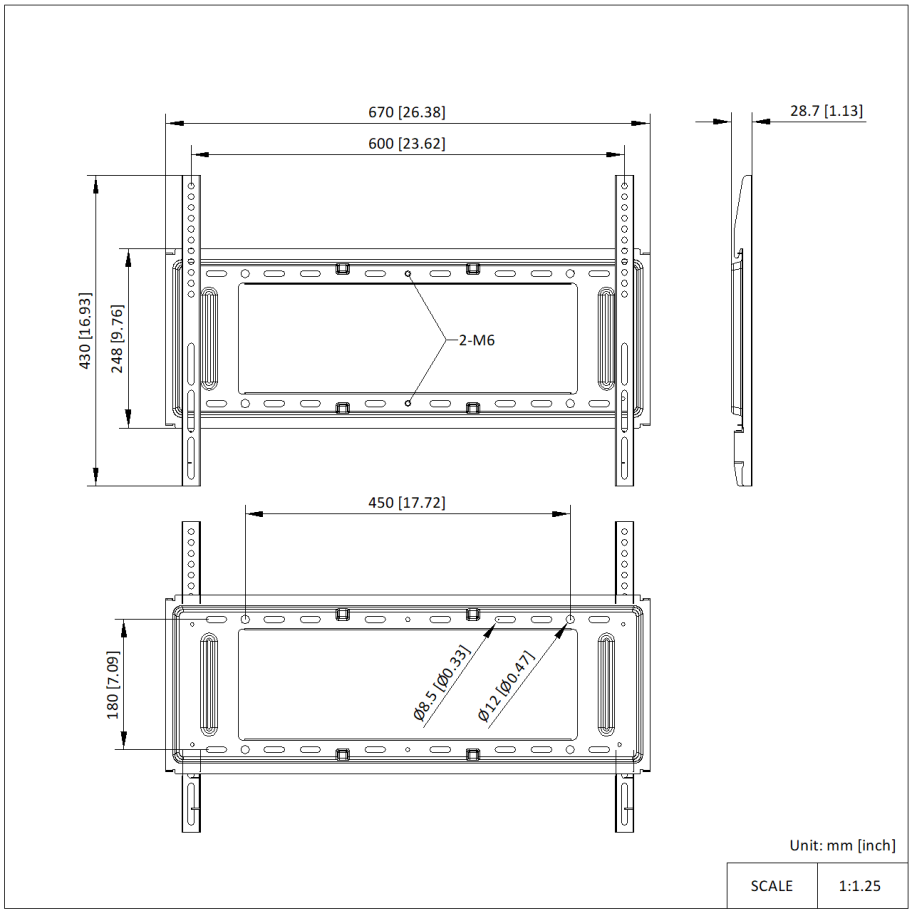

▪ Accessory

▪ Optional

DS-D5AC13T5-8S2	DS-D5AC13T7-16S5	DS-D5SC3B-B	DS-D5SC3B-W	DS-UVC-X12
				
DS-D5ABKY2-S	**DS-D5AC12T7-16S5**	**iDS-UVC-X28**	**DS-D5AC12T5-8S2**	**DS-D5ABKY3-EL**
				

See Far, Go Further

www.hikvision.com
support@hikvision.com

© Hangzhou Hikvision Digital Technology Co., Ltd. Unless otherwise agreed, Hikvision makes no warranties, express or implied. We reserve the right to introduce modifications without notice.

HIKVISION®