DS-2CFSP4/4G
4MP 24/7 Solar 4G PT Camera





Hikvision Solar Camera supports AOV mode, ultra-low power consumption, 24/7 video recording. The package contains solar panel and lithium battery, so it requires NO network or power cables. It is ideal for outdoor HD surveillance of small businesses and private properties, as well as close-range surveillance of roads, parks, estates, farms, plantations, construction sites, etc.

- Support AOV Mode: 24/7 video recording
- 8 W solar panel and 9000 mAh battery
- Support 4G LTE data transmission
- Smart Hybrid Light: 30 m white light and IR
- Motion Detection 2.0: Support person and vehicle detection
- Built-in microphone and speaker, support two-way audio
- Water and dust resistant (IP66)
- Smart Tracking: PT Camera achieves person tracking with Motion Detection 2.0

▪ Specification

Camera	
Image Sensor	1/3" Progressive Scan CMOS
Max. Resolution	2560 × 1440
Shutter Time	1 s to 1/100,000 s
Min. Illumination	Color: 0.005 Lux @ (F1.2, AGC ON),B/W: 0 Lux with IR
Day & Night	IR cut filter
Lens	
Lens Type	Fixed focal lens, 2.8 and 4 mm optional
Focal Length & FOV	2.8 mm, horizontal FOV 95.7°, vertical FOV 51.7°, diagonal FOV 113.7° 4 mm, horizontal FOV 79.6°, vertical FOV 43.2°, diagonal FOV 93.2°
Lens Mount	M12
Iris Type	Fixed
Aperture	F1.28
PTZ	
Movement Range (Pan)	0° to 340°
Movement Range (Tilt)	0° to 80°
Pan Speed	Up to 20°/s
Tilt Speed	Up to 25°/s
Pixel Density	
DORI	2.8 mm D: 63.9 m, O: 25.4 m, R: 12.8 m, I: 6.4 m 4 mm D: 77.6 m, O:30.8 m, R: 15.5 m, I: 7.8 m
Illuminator	
Supplement Light Type	IR,White Light
Supplement Light Range	Up to 30 m
Smart Supplement Light	Yes
IR Wavelength	850 nm
Video	
Main Stream	50 Hz: 12.5 fps (2560 × 1440, 1920 × 1080, 1280 × 720) 60 Hz: 15 fps (2560 × 1440, 1920 × 1080, 1280 × 720)
Video Bit Rate	32 Kbps to 8 Mbps
H.265 Type	Main Profile
Bit Rate Control	CBR,VBR
Audio	
Audio Compression	G.711ulaw
Audio Bit Rate	64 Kbps(G.711ulaw)
Audio Sampling Rate	8 kHz/16 kHz
Environment Noise Filtering	Yes
Network	
Simultaneous Live View	Up to 6 channels
API	EZVIZ
User/Host	Up to 32 users 3 user levels: administrator, operator, and user
Client	Hik-Connect

Mobile Communication	
Standard	LTE-FDD,LTE-TDD,UMTS
Frequency	EU:LTE-FDD: B1/3/5/7/8/20/28 LA:LTE-FDD: B2/3/4/5/7/8/28/66
Uplink and Downlink Data Rate	EU: Cat 1, uplink: 5.1 Mbps, downlink: 10.3 Mbps, IN: Cat 1, uplink: 5.1 Mbps, downlink: 10.3 Mbps, LA: Cat 1, uplink: 5.1 Mbps, downlink: 10.3Mbps, NA: Cat 4, uplink: 50 Mbps, downlink:150 Mbps, JP: Cat 4, uplink: 50 Mbps, downlink:150 Mbps
SIM Card Type	Nano SIM
Image	
Image Settings	Saturation,brightness,contrast,sharpness,white balance
Day/Night Switch	Day,Night,Auto,Schedule
Image Enhancement	BLC,HLC,3D DNR
Wide Dynamic Range (WDR)	Digital WDR
Interface	
On-Board Storage	Built-in memory card slot, support microSD/microSDHC/microSDXC card, up to 512 GB
Built-in Microphone	1 built-in microphone
Built-in Speaker	1 built-in speaker
Reset Key	Yes
Event	
Basic Event	Motion detection (support alarm triggering by specified target types (human and vehicle))
Linkage	Notify surveillance center,trigger recording,trigger capture,audible warning,upload to memory card
General	
Material	Plastic
Dimension	208 mm × 131 mm × 282.7 mm (8.19" × 5.16" × 11.13")
Package Dimension	386 mm × 201 mm × 225 mm (15.20" × 7.91" × 8.86")
Weight	Approx. 850 g (1.87 lb.)
With Package Weight	Approx. 5400 g (11.90 lb.)
General Function	Mirror,flash log
Storage Conditions	-30 °C to 60 °C (-22 °F to 140 °F). Humidity 95% or less (non-condensing)
Startup and Operating Conditions	0 °C to 50 °C (32 °F to 122 °F). Humidity 95% or less (non-condensing)
Battery	
Battery Type	Lithium
Battery Voltage	DC 6 V to DC 8.4 V
Capacity	9000 mAh (3.7 V)
Max. Charging Voltage	8.4 V
Max. Output Voltage	8.4 V
Operating Temperature	Charging: 0 °C to 45 °C (32 °F to 113 °F) Discharging: -20 °C to 55 °C (-4 °F to 131 °F)
Battery Life	More than 800 cycles
Approval	
RF	CE-RED: EN 301489-1 V2.1.1 (BT or 2.4G), EN 301489-17 V3.1.1 (BT or 2.4G), EN 300328 V2.1.1 (BT or 2.4G), EN 62311:2008 (BT or 2.4G) *CE certification is only for the device sold in the European region.

EMC	CE-EMC: EN 55032:2015+A1:2020, EN 50130-4:2011+A1:2014, EN IEC 61000-3-2:2019+A1:2021, EN 61000-3-3:2013+A1:2019+A2:2021, IC: ICES-003: Issue 7, KC: KN32: 2015, KN35: 2015
Safety	CB: IEC 62368-1: 2014+A11, CE-LVD: EN 62368-1: 2014/A11: 2017, BIS: IS 13252 (Part 1): 2010/IEC 60950-1: 2005
Environment	CE-RoHS: 2011/65/EU, WEEE: 2012/19/EU, Reach: Regulation (EC) No 1907/2006
Protection	IP66: IEC 60529-2013

▪ Typical Application

Hikvision products are classified into three levels according to their anti-corrosion performance. Refer to the following description to choose for your using environment.

This model has NO SPECIFIC PROTECTION.

Level	Description
Top-level protection	Hikvision products at this level are equipped for use in areas where professional anti-corrosion protection is a must. Typical application scenarios include coastlines, docks, chemical plants, and more.
Moderate protection	Hikvision products at this level are equipped for use in areas with moderate anti-corrosion demands. Typical application scenarios include coastal areas about 2 kilometers (1.24 miles) away from coastlines, as well as areas affected by acid rain.
No specific protection	Hikvision products at this level are equipped for use in areas where no specific anti-corrosion protection is needed.

▪ Dimension

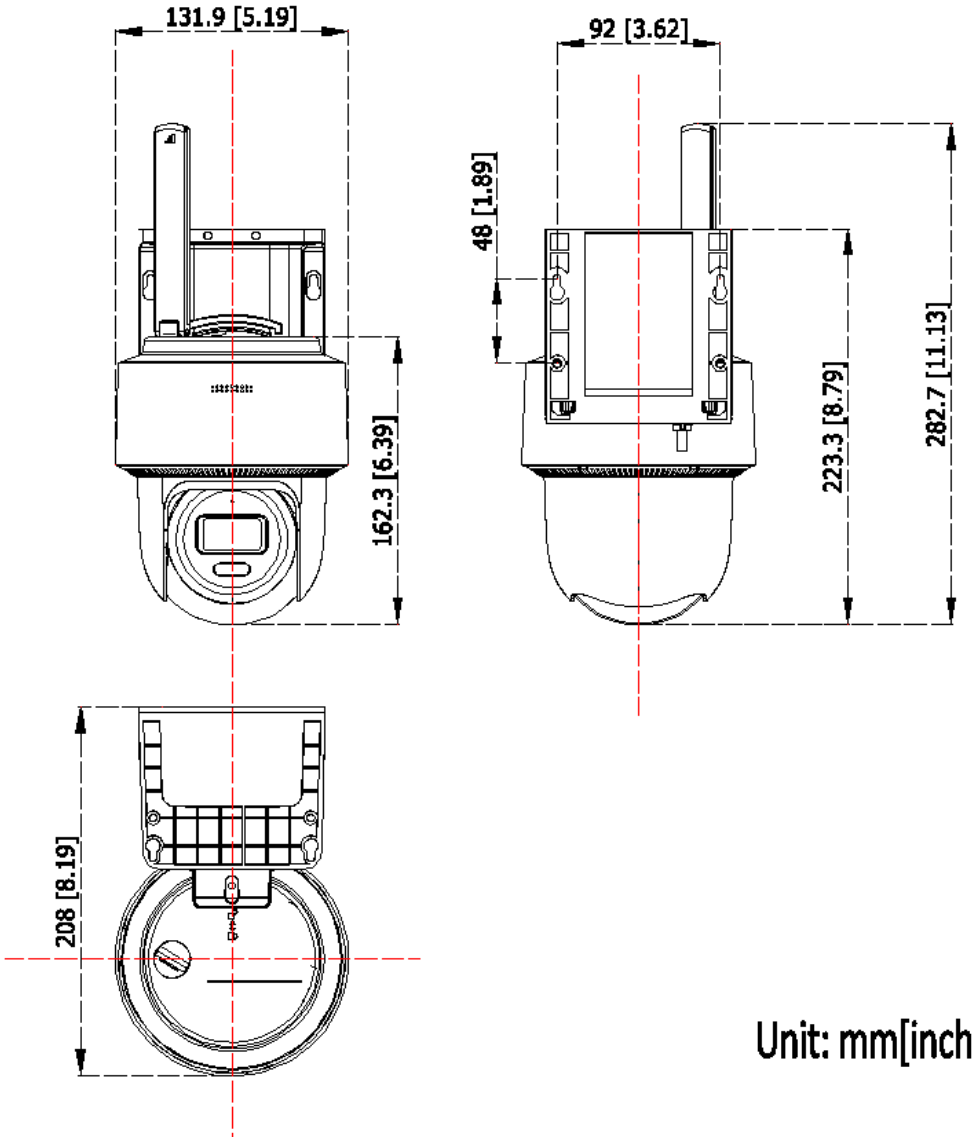
131.9 [5.19]
92 [3.62]
48 [1.89]
162.3 [6.39]
223.3 [8.79]
282.7 [11.13]
208 [8.19]

Unit: mm[inch]

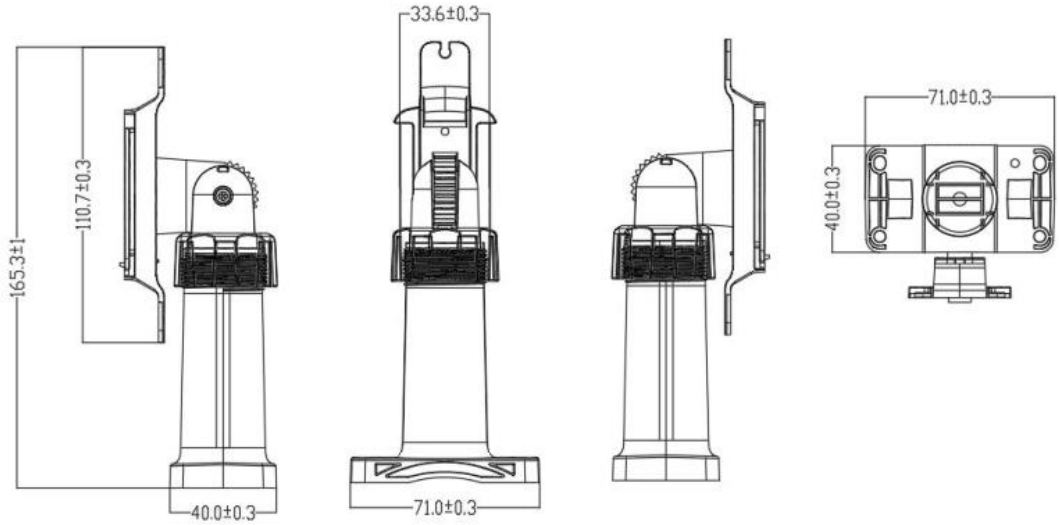
33.6±0.3
165.3±1
110.7±0.3
40.0±0.3
71.0±0.3
71.0±0.3
40.0±0.3

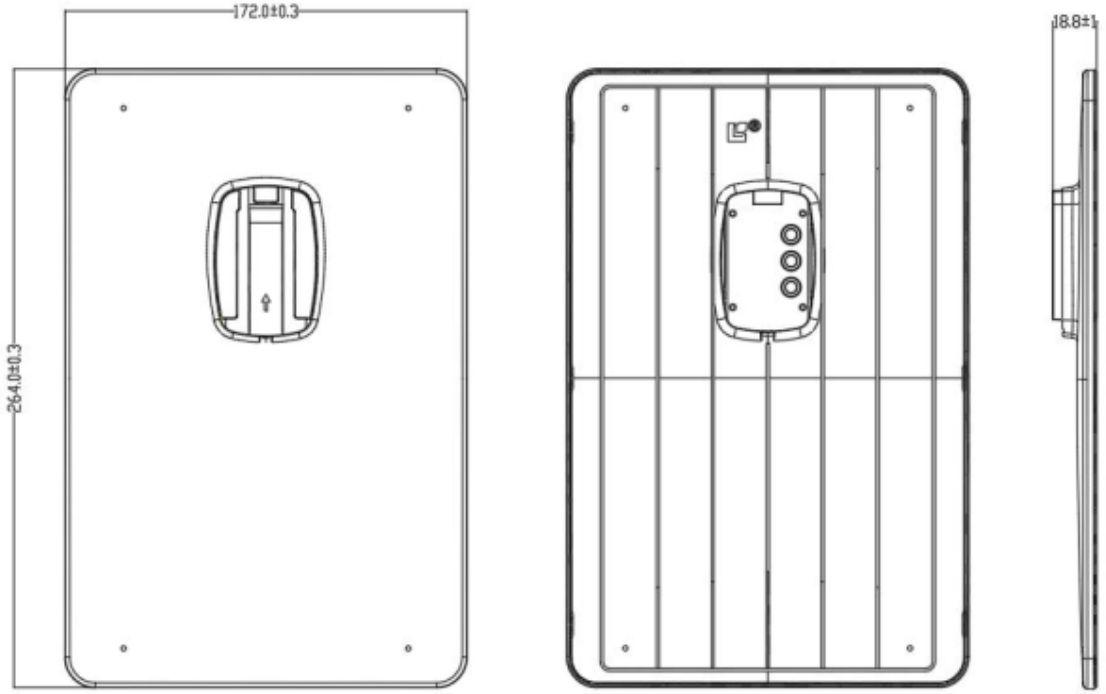
172.0±0.3
264.0±0.3
18.8±1

See Far, Go Further

www.hikvision.com
support@hikvision.com

© Hangzhou Hikvision Digital Technology Co., Ltd. Unless otherwise agreed, Hikvision makes no warranties, express or implied. We reserve the right to introduce modifications without notice.

HIKVISION®