# DS-TMG423
## Barrier gates with fence boom pole

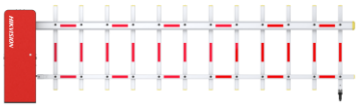

- Adopts integrated machine core. Parallel gear decelerates linkage arm transmission to ensure stability and efficiency.
- Supports convenient side installation with compact structure.
- Adopts quenching process for carbon steel gear to realize wear-resistant and impact-resistant functions and extend product life.
- Adopts small DC brushless motor with low noise to increase output torque and realize precise intelligent control.
- Supports rebound for obstacle and opening priority.
- Adopts DC variable frequency control to enable smooth operation with fast boom pole opening and slow boom pole closing.
- Supports event log to enable convenient monitoring.
- Supports multiple anti-fall modes such as IR, vehicle detectors, and radars.
- Supports fault code detection on the nixie tube, log record, and abundant status indicating. Based on the fault code displayed on the nixie tube, you can realize quickly problems locating and maintenance.
- Supports manually opening boom pole. You can turn hand wheel to keep barrier gate opening during power cutoff.
- Delayed boom pole closing (10 s delay time by default). Supports 99 shifts (initial status 2 s, 2 s gap between each shift).
- Supports auto boom pole opening during power cutoff. The barrier gate can open automatically to allow fire trucks in (optional components required).

## ▪ Specification

| | |
|---|---|
| **Barrier Housing** | |
| Barrier Housing Material | SGCC |
| Barrier Housing Thickness | 1.5 mm |
| Barrier Housing Door Thickness | 1.2 mm |
| Barrier Housing Color | Iron gray |
| Barrier Housing Door Color | Orange red |
| Boom Pole Installation Height | 885 mm |
| Body Indicators | DS-TMG423, DS-TMG423-L, DS-TMG423-R: No body indicator<br>DS-TMG423/B, DS-TMG423-L/B, DS-TMG423-R/B: With body indicator. Green: arrow indicator. Red: passing prohibition indicator. |
| **Barrier Gate General** | |
| Rising Speed | 4m: 3s, 5m: 5s |
| Falling Speed | 4m: 3s, 5m: 5s |
| Boom Pole Direction | DS-TMG423-L: Left<br>DS-TMG423-R: Right |
| Motor Type | DC brushless motor |
| Matched Boom Pole Type | Fence boom pole |
| Boom Pole Falling Delay | 10 s by default (configurable), min. 2 s (every 2 s followed a gap) |
| Number of Cycles | 5,000,000 |
| Working Voltage | 100-120VAC / 200-240VAC (default 220-240V , switchable) |
| Consumption | DS-TMG423-L, DS-TMG423-R: Max. 168 W<br>DS-TMG423-L/B, DS-TMG423-R/B: Max. 176 W |
| Temperature and Humidity | Temperature: -30 °C to 60 °C (-22 °F to 140 °F),Humidity: ≤ 90% |
| Rising Boom Pole for Poweroff | Optional, not supported by default |
| **Barrier Gate** | |
| Duty Cycle | 100% |
| **Interface** | |
| RS-485 | 1 group |
| Rising to Limit | 1 group |
| Falling to Limit | 1 group |
| Open | 1 group |
| Close | 1 group |
| Stop | 1 group |
| IR/Vehicle Detector/Radar | 1 group |
| Traffic Signal Light | 1 group, external power supply required, max. 220 VAC supported |
| **Boom Pole** | |
| Boom Pole Color | White background with red bar |
| Boom Pole Weight | 3 m: 7.8 ± 0.3 kg (8.33 ± 0.66 lb.)<br>4 m: 9.65 ± 0.3 kg (21.27 ± 0.66 lb.)<br>2.5 + 2.5 m: 11.75 ± 0.3 kg (25.9 ± 0.66 lb.) |
| Boom Pole Dimensions (with Package) | 3 m: 250 × 90 × 3280 mm (9.84 × 3.54 × 129.13 inch)<br>4 m: 230 × 90 × 4300 mm (9.06 × 3.54 × 169.29 inch)<br>5 m: 140 × 90 × 5260 mm (5.51 × 3.54 × 207.09 inch) |

| | |
|---|---|
| Boom Pole Weight (with Package) | 3 m: 9.56 ± 0.3 kg (21.07 ± 0.66 lb.)<br>4 m: 11.34 ± 0.3 kg (25 ± 0.66 lb.)<br>5 m: 13.64 ± 0.3 kg (30.07 ± 0.66 lb.) |
| Boom Pole Dimensions | 3 m: 1261.5 × 92.5 × 3000 mm (49.67 × 3.64 × 118.11 inch)<br>4 m: 1261.5 × 92.5 × 4000 mm (49.67 × 3.64 × 157.48 inch)<br>5 m: 1261.5 × 92.5 × 5000 mm (49.67 × 3.64 × 196.85 inch) |
| Boom Pole Material | AL6061 |
| **Approval** | |
| RF | CE-RED<br>EN 300220-1 V3.1.1<br>EN 300220-2 V3.1.1<br>EN 301489-1 V2.2.3<br>EN 301489-3 V2.1.1<br>EN IEC 62311: 2020 |
| EMC | CE-EMC：<br>EN 55032: 2015/A11: 2020 + A1: 2020,<br>EN IEC 61000-3-2: 2019/A1: 2021,<br>EN 61000-3-3: 2013 + A1: 2019/A2: 2021,<br>EN 50130-4: 2011+A1: 2014 |
| Security | CE-LVD:<br>EN 62368-1: 2014/A11: 2017<br>CB:<br>IEC 62368-1: 2014<br>IEC 62368-1: 2018 |
| Environment | ROHS |
| Protection | IP54, IK09 |
| **Package** | |
| Barrier Housing Dimensions (L × W × H) | 1060 × 370 × 262 mm (41.73 × 14.57 × 10.31 inch) |
| Body Weight | 43 ± 3 kg (94.8 ± 6.61 lb.) |
| Body Dimensions (with Package, Without Boom Pole) (L × W × H) | 1266 × 504 × 626 mm (49.84 × 19.84 × 24.65 inch) |
| Body Weight (with Package, Without Boom Pole) | 47 ± 3 kg (103.61 ± 6.61 lb.) |

## ▪ Dimension

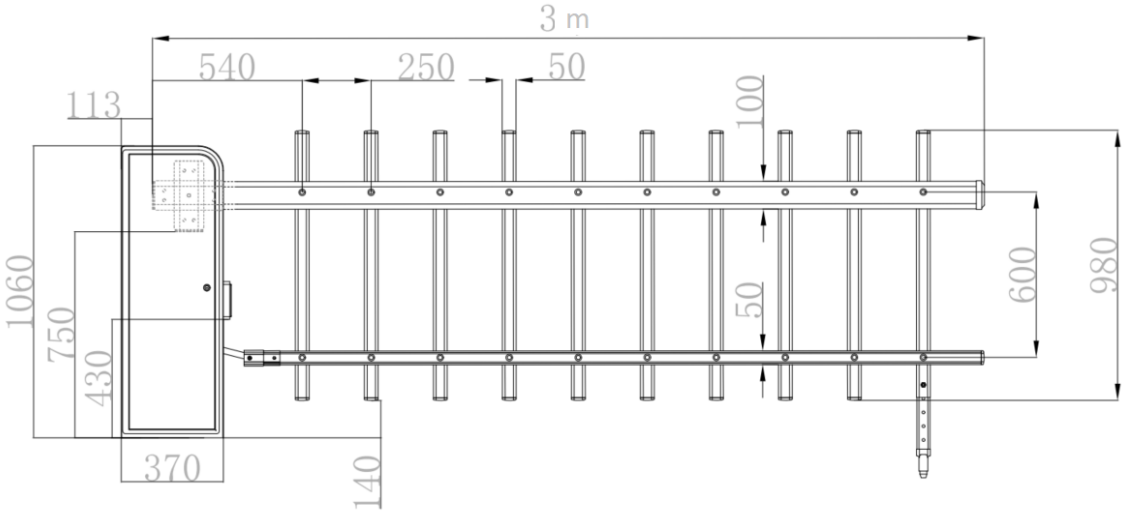
3 m
540
250
50
113
100
1060
750
430
50
600
980
370
140

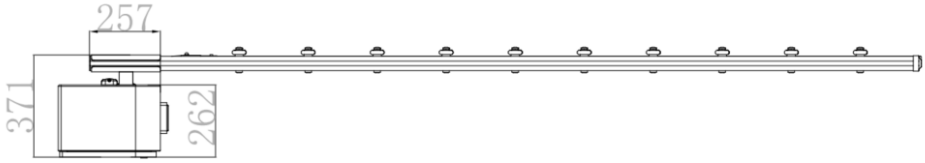
257
371
262

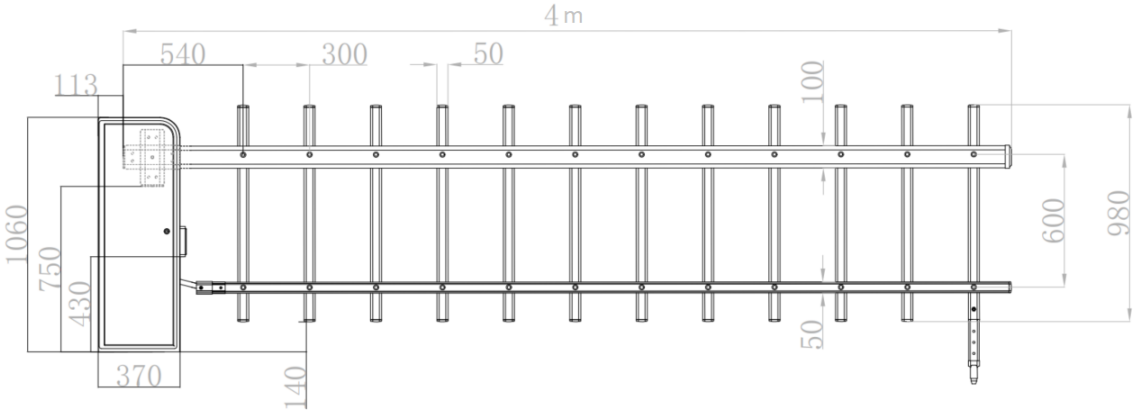
4 m
540
300
50
113
100
1060
750
430
600
980
50
370
140

257
371
262

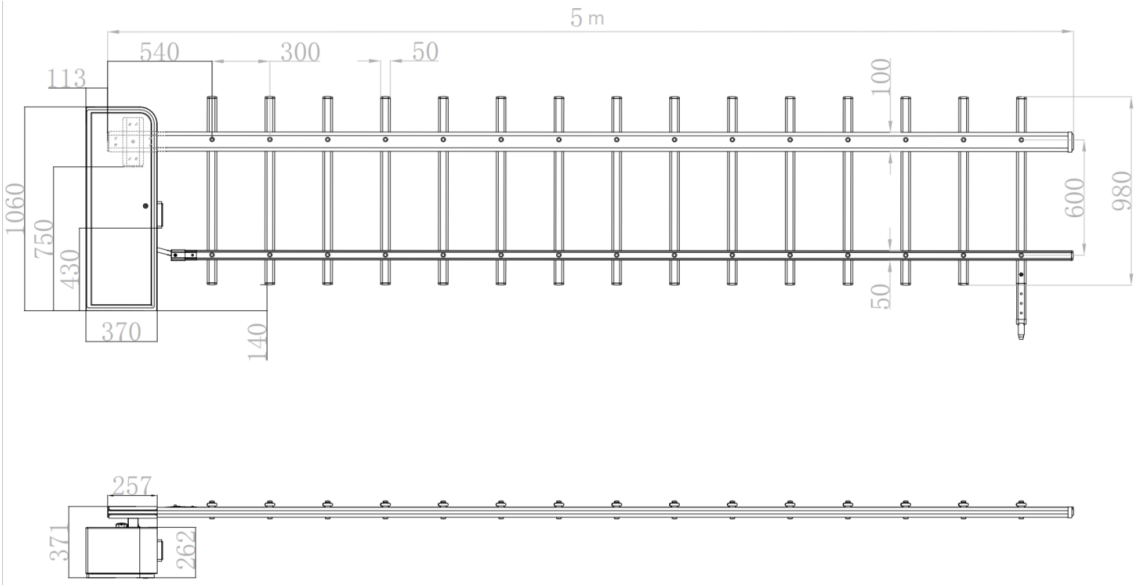


## ▪ Accessory

### ▪ Included

| DS-TMG070/4B/42 | DS-TMG012-5 | DS-TMG004-5 |
|---|---|---|
| 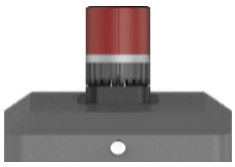 | | 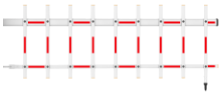 |

### ▪ Optional

| DS-TMG013-5 | DS-TMG012-A1 | DS-TMG022 | DS-TMG023 | DS-TVL221-1-6D |
|---|---|---|---|---|
| | | | | |
| **DS-TMG000-2-R(high speed)** | **DS-TMG000-2-R(low speed)** | **DS-TMG000-2-L(high speed)** | **DS-TMG000-2-L(low speed)** | **DS-TMG060-42** |
| 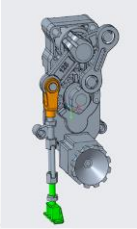 | 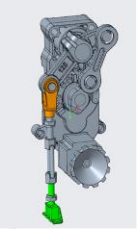 | 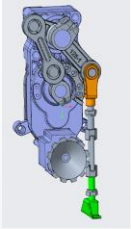 | 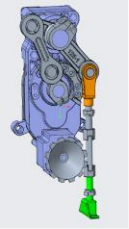 | |

| DS-TMG050 | DS-TMG070/4B/42(24V) | TMG080-3 |
| --- | --- | --- |
| | | |

See Far, Go Further

www.hikvision.com
support@hikvision.com

© Hangzhou Hikvision Digital Technology Co., Ltd. Unless otherwise agreed, Hikvision makes no warranties, express or implied. We reserve the right to introduce modifications without notice.